SASKATCHEWAN POWER CORPORATION

We Care

SAFETY & OCCUPATIONAL HEALTH

GUIDELINES FOR IDENTIFICATION AND CONTROL
OF
A S B E S T O S
AND ASBESTOS HEALTH HAZARDS

1985 MARCH 14

TABLE OF CONTENTS

		Page
1.0	INTRODUCTION	1
2.0	GENERAL INFORMATION ON ASBESTOS	2
2.1	What is Asbestos	2
2.2	World Production	4
2.3	Asbestos Products--Uses	5
3.0	ASBESTOS AND ITS HEALTH HAZARDS	6
3.1	Principal Diseases	6
3.1.1	Mesothelioma	6
3.1.2	Pleural Disease	7
3.1.3	Asbestosis	7
3.1.4	Lung Cancer (excluding Mesothelioma)	8
3.1.5	Other Asbestos Related Cancers	9
3.1.6	Asbestos Warts	9
3.2	Time Span	10
3.3	Health Surveillance	10
3.4	Employee Registry	12
3.4.1	Assembly	12
3.4.2	Activities	12
3.4.3	Details	12
4.0	IDENTIFYING ASBESTOS	14
4.1	Visual Inspections	14
4.2	Bulk Sampling	15
4.2.1	Procedures	15
4.2.2	Sample Retention	16
4.3	Marking Asbestos Material	16
4.3.1	Objectives	16
4.3.2	Methods	16
4.3.3	Management	18
4.3.4	References	19

		Page
4.4	Records of Asbestos	22
4.4.1	Plants	22
4.4.2	Buildings	22
4.4.3	Air Sampling	22
4.4.4	Records	23
5.0	WORKER PROTECTION	24
5.1	Respirators	24
5.1.1	Categories	24
5.1.2	Choice of the Correct Respirator	25
5.2	Clothing	26
6.0	CONTROLLING THE HAZARD	27
6.1	General Information	27
6.2	The Removal, Encapsulation, or Enclosure of Asbestos	28
6.2.1	Worker Preparation	29
6.2.2	Site Preparation	29
6.2.3	General Rules	32
6.2.4	Personal Decontamination	33
6.2.5	Work ARea Cleanup and Decontamination	33
6.3	Removal of Limited Amounts of Asbestos for Equipment Repair	34
6.3.1	Worker Preparation	34
6.3.2	Workplace Preparation	34
6.3.3	Work Routine	34
6.3.4	Personal Decontamination	35
6.3.5	Work Area Cleanup and Decontamination	35
6.4	Inspections	36
6.4.1	Annual	36
6.4.2	More Frequent	36
6.5	Air Sampling	36
6.5.1	Sampling Equipment	37
6.5.2	Sampling Method/Procedure	38
7.0	TRANSPORT AND DISPOSAL OF ASBESTOS REFUSE	44
8.0	MATERIALS MANAGEMENT	46

		PAGE
9.0	PUBLIC PROTECTION AND ENVIRONMENTAL LIMITS	47
10.0	GOVERNMENT REGULATIONS AND GUIDELINES	48
PUBLICATIONS		61
APPENDICES		62

1.0 INTRODUCTION

Asbestos-related diseases cannot be detected at an early stage, medical treatment is limited and it cannot be cured. Cases are reported in medical and scientific literature where symptoms occurred years after the first exposure to asbestos dust. And yet, these symptoms were not enough to suspect asbestos as the culprit. Prevention is the best approach to asbestos-related diseases in the workplace. This involves the control of the work processes and the ability of the asbestos worker to protect themselves.

This document presents procedures for the control of airborne asbestos, asbestos exposure, and particles transferred to the skin. These present Saskatchewan Power Corporation's policy respecting a safe workplace. The procedures are aimed at reducing and controlling the asbestos hazards and at identifying workers who may be at risk because of their exposure to asbestos or asbestos-containing materials. The Occupational Health and General Regulations of 1981, Part XI, pertaining to asbestos, provide the umbrella. *(See Section 10.0.)*

2.0 GENERAL INFORMATION ON ASBESTOS

2.1 WHAT IS ASBESTOS

Asbestos is the generic name given to a a group of natural-occurring, mineral-silicate fibres that can be separated from the parent rock.

The parent rocks may be divided into the "amphibole" and the "serpentine" varieties giving rise to "amphibole" and "serpentine" asbestos fibres.

amphibole:	amosite	- brown asbestos
	crocidolite	- blue asbestos
serpentine:	chrysotile	- white asbestos

Of the above types of asbestos, chrysotile is the most prominent commercial variety. However, Western Canada has an approximate 50:50 split of amosite and chrysotile.

Asbestos fibres are heat-, light-, and chemical-resistant and are, therefore, suitable to thermal, electrical, and sound insulation. The asbestos content in these insulating materials may vary from 5 to 100 percent depending upon the required property.

Asbestos fibres are not very wear resistant as small fibres break off and are carried along by the air currents; thus, asbestos is said to be "friable"--meaning asbestos is easily converted into a fine dust by crumbling or crushing.

The term "asbestos cement" may be misleading. One definition shows it as a paste of asbestos and water. When drying, this paste hardens very much like cement does. Another definition of asbestos cement actually means cement with asbestos as a filler. Since both materials may produce breathable fibres, they must be treated with proper procedures for handling asbestos.

Asbestos can occur naturally within Saskatchewan. For instance, serpentine parent rock is found in the Precambrian Shield areas of the province.

FIGURE I : PRINCIPAL VARIETIES OF ASBESTOS

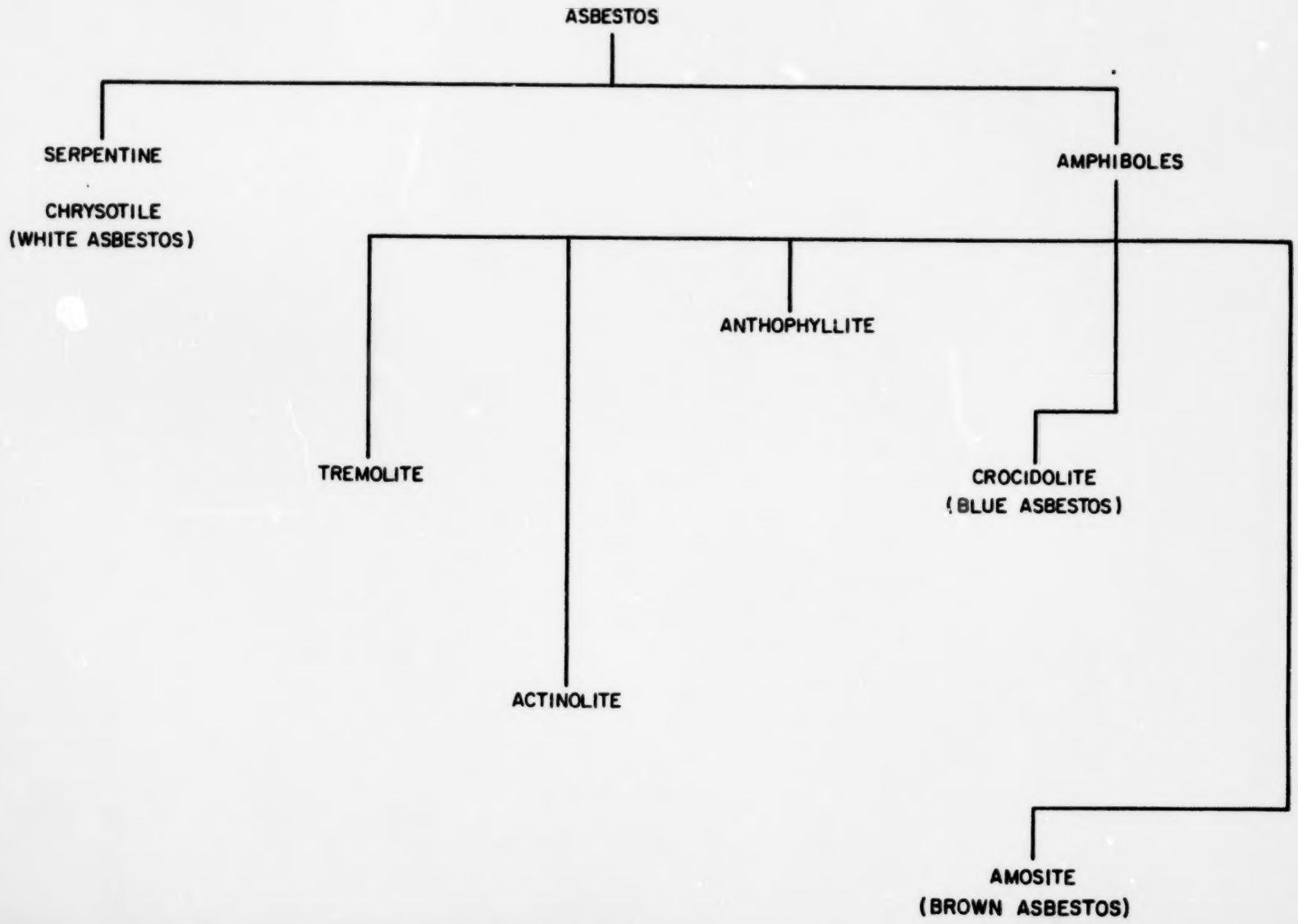

2.2 WORLD PRODUCTION - *Figure 2*

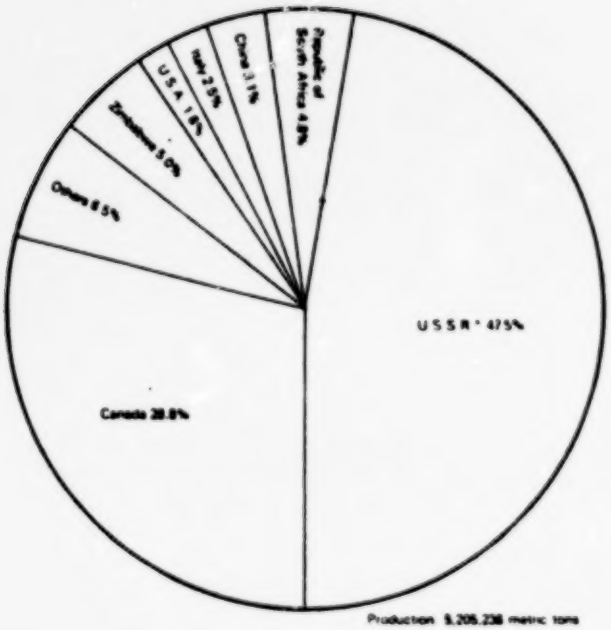

Note: *Approximately equivalent to Canadian grades.

SOURCE: G. Oliver Vagt, *Asbestos* (Hull, Quebec: Supply and Services Canada, 1980), Figure 2, p. 7 (based on numerous sources).

2.3 ASBESTOS PRODUCTS--USES

The following chart shows selected asbestos products and their end uses:

Floor Tile	Gaskets and Packings	Friction Products
Office floors	Valve components	Clutch/transmission components
Commercial floors	Flange components	Brake components
Residence floors	Pump components	Industrial friction materials
	Tank sealing components	

Paints, Coatings and Sealants	Asbestos-Reinforced Plastics	Asbestos Cement Pipe
Automotive/Truck body coatings	Electric motor components	Chemical process piping
Roof coatings and patching compounds	Molded product compounds for high-strength/weight uses	Water supply piping
		Conduits for electric wires

Asbestos Textiles	
Packing components	Heat/fire protective clothing
Gasket components	Clutch/transmission components
Roofing materials	Electrical wire and pipe insulation
Commercial/industrial dryer felts	Theater curtains and fireproof draperies

Asbestos Paper	
Gas vapor ducts for corrosive compounds	Gasket components
Fireproof absorbent papers	Underlayment for sheet flooring
Table pads and heat protective mats	Electric wire insulation
Heat/fire protection components	Filters for beverages
Molten glass handling equipment	Appliance insulation
Insulation products	Roofing materials

Asbestos Cement Sheet	
Hoods, vents for corrosive chemicals	Fire protection
Chemical tanks and vessel manufacturing	Insulation products
Portable construction buildings	Small appliance components
Electrical switchboards and components	Electric motor components
Residential building materials	Laboratory furniture
Molten metal handling equipment	Cooling tower components
Industrial building materials	

Source: Asbestos Information Association/North America.

3.0 ASBESTOS AND ITS HEALTH HAZARDS

Note: *General Reference: "Asbestos Related Disease," Alberta Labour*

Asbestos has been proven to be harmful when it enters the body through the nose or the mouth. When asbestos becomes airborne, it can be inhaled into the respiratory tract and carried by the airstream deep into the lungs. The likelihood that a fibre remains airborne and, therefore, can be inhaled, is determined by its size and shape. The amphiboles are more likely to stay airborne than the serpentine.

Once embedded in lung tissue, the fibres remain for extended periods of time. The proportion remaining is higher for amphiboles than for chrysotile.

The physical properties of fibre size and shape described above determine the hazardous potential of the asbestos. Generally speaking, the amphiboles are considered more of a health hazard than the serpentine. However, all asbestos forms, once embedded in the lung, can lead to inflammation and scarring of the tissue or malignant (cancerous) changes.

Asbestos cannot enter the body by absorption through the skin because asbestos is insoluble. Open wounds may permit asbestos fibres to become lodged under the skin.

The principal forms of asbestos-related diseases in industry are:

1. mesothelioma
2. pleural disease
3. asbestosis
4. lung cancer
5. laryngeal cancer
6. gastrointestinal cancer

The health effects vary according to type, concentration and size of the fibre inhaled; duration of exposure; and (in the case of lung cancer) concurrent tobacco smoking.

Minor asbestos-related diseases--e.g., asbestos wart--may occur and are considered only as a sign of exposure to asbestos.

3.1 PRINCIPAL DISEASES

3.1.1 Mesothelioma

Each internal organ is wrapped into a skin or membrane. This skin has a special name: "mesothelium," plural: "mesothelia." The mesothelium of

the lungs or peritoneum (bowels) may develop cancer called "mesothelioma" (mesothelium + carcinoma). All cases of mesothelioma have had a history of exposure to asbestos.

Mesothelioma is fatal. The average life span after diagnosis is 18 months.

3.1.2 Pleural Disease

A second skin, called the pleura, is wrapped around the lungs. Its purpose is to hold a lubricating layer for easier movement of the lungs during breathing. Asbestos fibres can lead to changes in the lung lining. These changes include thickening of the lining (pleura). This is also described as a plaque formation which is a formation of scar tissue with calcium deposited in the tissue. Fatalities are very rare. Thus pleura thickening is normally a marker to tell the physician that the patient has been exposed to asbestos.

3.1.3 Asbestosis

Asbestosis is a scarring and shrinking of lung tissue caused after exposure to airborne asbestos dust which is retained in the lungs.

The formation of scar tissue in the lungs is called fibrosis. The lungs cannot clean themselves of the asbestos particles (carried with the stream of air) that are deposited on the surface of the lung sacs that exchange oxygen between air and blood. The foreign invaders are encapsulated by hard tissue (scar) which keeps growing over in future years. The lung now recognizes the scar tissue as another foreign and non-removable invader; thus, keeps on forming scar tissue to cover the scar.

The scar tissue is less elastic than the original tissue and it is more difficult to breathe and to exchange oxygen. The extent of lung damage increases with the amount of asbestos retained by the lung. The symptoms of this disease are gradual and include shortness of breath, cough, and chest discomfort. A physician may hear a crackling sound in the stethoscope. A decrease in the volume of air breathed in and out and the presence of the crackling may also occur with other disorders; such as, a high degree of nervousness or a bronchitis. The only sure sign of asbestosis is an X-ray photo in which spots are visible in the lower and middle zones of the lungs. These spots become visible years after continuing exposure to asbestos.

At the same time, the fibres encircle the lungs' blood vessels. This, in turn, requires that the blood pressure goes up to pass sufficient blood through the lungs. The heart has to increase the pumping effort. This is why many asbestosis victims die of heart failure.

This disease can also be detected by pulmonary function (breathing) tests. However, there is no "curative" treatment for this disease; and because asbestos fibres are retained in the lung, the disease process continues--even though the worker is removed from further dust exposure.[1,2]

The development of asbestosis has been traced to a daily exposure of asbestos over a period of time.

3.1.4 Lung Cancer (excluding Mesothelioma)

Asbestos-exposed workers experience higher lung cancer rates than those not so exposed. However, lung cancers have no special diagnostic features that label them as asbestos caused. For example, lung cancers can also be caused by cigarette smoking.

Tobacco smoke and asbestos fibre interact synergistically (in a multiplicative, rather than additive way) and put the cigarette-smoking asbestos worker at a greater risk of developing lung cancer.[2]

If the number of cancer cases for non-smokers with little exposure to asbestos is set at one, the researchers have drawn the following multiplier table for chrysotile-asbestos miners in Quebec:

	Exposure to Asbestos (chrysotile)		
Amount of Smoking	Little	Moderate	Heavy
none	1	2	7
moderate	6	8	13
heavy	12	13	25

Note: With amosite or crocidolite these ratios are increased by a factor of 3.

Once cancer of the breathing system has been detected, it is usually fatal. No effective health screening or treatment methods are available in the course of this disease in most cases.

1 Selikoff & Lee, "Asbestos and Disease," Academic Press (1978)

2 Selikoff, Hammond & Chung (Am Med Assoc), "Asbestos, Smoking & Neophasia"

3.1.5 Other Asbestos Related Cancers

Other malignant neoplasms have also come to be associated with the inhalation of asbestos. An excess risk of gastrointestinal cancer affecting all sites in the gastrointestinal tract has been demonstrated in work by Selikoff in a study of asbestos workers.[2] More recently, certain studies have also implicated asbestos as a cause of cancer of the larynx.[2] However, the association between asbestos exposure and both gastrointestinal cancer and cancer of the larynx is neither as strongly nor as consistently established in medical literature as the association between asbestos exposure and the diseases previously discussed (lung cancer and mesothelioma).

3.1.6 Asbestos Warts

Asbestos warts are skin growths occurring in places where asbestos fibres have penetrated the skin like a sliver or where the fibres remained in cuts or bruises over which new skin grew. These harmless asbestos warts can serve as evidence of exposure to asbestos.

3.2 TIME SPAN

A difficulty in recognizing asbestos-related diseases is the time these diseases require to show up in a victim. The time variation from one individual to the next in developing an asbestos-related disease also covers a time span of years. From 10 to 35 years has been reported as a time span between initial exposure and recognition. Sometimes symptoms and signs--e.g., shortness of breath and cough--were noticeable five years before the correct diagnosis could be formulated or suspected.

3.3 HEALTH SURVEILLANCE

Generally, health surveillance is carried out for two reasons:

(1) Early detection of a disease by health surveillance might benefit the individual worker <u>if</u> the disease could be cured or, <u>if</u>, at least, the disease process could be stopped.

---

1 Selikoff & Lee, "Asbestos and Disease," Academic Press (1978)

2 Selikoff, Hammond & Chung (Am Med Assoc), "Asbestos, Smoking & Neophasia"

(2) Review of surveillance results of workers in a specific area can be used to identify health problems and effectiveness of workplace control, so that future problems can be avoided.

However, it should be emphasized that health surveillance for asbestos-related disease is of limited benefit for the individual worker because:

a) there is no curative treatment;
b) the asbestos-related cancers are fatal and survival five years after diagnosis is rare; in the case of mesothelioma, survival 18 months after diagnosis is rare;
c) asbestos-related diseases can progress, even though the worker is removed from future asbestos exposure. This is because retained asbestos fibres in the lungs are not rejected or dissolved.

However, lung function tests are valuable at any age as they provide base-line data for future surveillance of development of asbestosis or peripheral conditions (e.g., pneumonia).

Section 119, Part XI of the Occupational Health and Safety Act Saskatchewan, April 1981 states:

"(1) Any worker regularly employed in an asbestos process is entitled, upon request to the employer, to be medically examined once in each year.

Note: Section 107 Part XI defines the asbestos process as:

"...any handling of materials containing asbestos included: sawing, cutting, sanding, or spraying; the repair or maintenance of asbestos surfaces; the cleaning or disposal of asbestos material; the mixing or application of asbestos shorts, cements, grouts, putties, or similar compounds; the storing or conveyance of asbestos materials; and the demolition of buildings or structures containing asbestos."

"(2) Within one month after the day a request is received pursuant to subsection (1), the employer shall arrange for and pay the full cost of the medical examination, which must include:

(a) a comprehensive physical examination with special attention to the lungs;
(b) lung-function tests including forced vital capacity and forced expiratory volume at one second; and
(c) any further medical procedures that are necessary for the diagnosis of an asbestos-related disease.

Note: These may be carried out by, or arranged by the Corporation's Medical Department.

"(3) The findings of the medical examination described in subsection (2) shall be given by the physician to the worker and, upon the request of the worker, to a designated physician, but shall otherwise be kept by the examining physician in confidence except:

(a) with respect to the chief occupational medical officer;
(b) where otherwise required by law; or
(c) with the informed consent of the worker.

3.4 EMPLOYEE REGISTRY

The latency of asbestos related disease and the long period of time between exposure and manifestation of a disease to a point of absolute diagnosis and/or impairment could lead to some difficulty in establishing such a disease as work related.

While the Workers' Compensation Board (W.C.B.) are duty bound to do a thorough investigation, they, too, are hampered by elapsed time.

Therefore, the SPC is establishing and maintaining a record or "registry" of those persons who have worked in areas of the Corporation where they may have had exposure to asbestos.

3.4.1 Assembly

The registry is being assembled in stages as follows:

(1) Present employees in those locations where asbestos is known

(2) Present employees no longer in such locations

(3) Previous employees in those locations

3.4.2 Activities

The registry activities will include:

(1) Maintenance of the list on an ongoing basis

(2) Notification to the W.C.B. of the persons on the registry and update of this notification.

3.4.3 Details

(1) First Stage

(a) Assembly of present employees from:
- Queen Elizabeth Power Station
- Boundary Dam Power Station
- Estevan Generating STation

(b) Notification to these employees that their names are filed with the W.C.B.

(c) List to the W.C.B.

(2) Second Stage

(a) Assembly of present employees, but no longer in these locations

(b) Notification to these employees

(c) List to the W.C.B.

(3) Third Stage

(a) Assembly of employees at locations where there is known asbestos

(b) List to the W.C.B.

(4) Fourth Stage

Maintenance of registry by filing names of new or transferred employees with the W.C.B.

(5) Fifth Stage

Supplement to this:

"Any employee not so placed may be included on the registry by an application to the Division of Safety and Occupational Health which substantiates possible exposure.

4.0 IDENTIFYING ASBESTOS

Asbestos is a white, grey, brown, or blue fibrous material. If a substance in the workplace is suspect, it should be examined to see if it contains asbestos. A sample should be obtained for identification of asbestos content. Materials containing asbestos may be confirmed by the optical microscopic method.

The sampling and analysis of suspected asbestos-containing material is extremely important. Neither visual inspection nor checking of facility records is adequate to establish the presence of asbestos. Suspect material could contain glass fibres, cellulose, or other non-asbestos mineral fibres. The decision to take corrective action will depend, to a great extent, on the results of the laboratory analysis. It is, therefore, critical that sampling is carried out properly and that laboratory analyses are performed accurately.

4.1 VISUAL INSPECTIONS

Proper evaluation of the potential hazard associated with asbestos-containing material includes a visual inspection, considering the level of activity in the area and determining the amount of asbestos in the material.

A visual inspection assesses the "accessibility," "condition," and "friability" of the material, and its presence in air plenums.

> "Accessibility" relates to how easily people can reach the material. Easy accessibility leaves the material open to accidental or intentional damage.
>
> The "condition" of the material is a combination of the quality of installation, material deterioration, and damage. Deterioration and damage may be caused by such things as water leakage or spills, vibration, air movement across the surface, and disruption of the surface by birds or animals.
>
> The ease with which a material will crumble is referred to as "friability." The more friable the material, the greater potential for fibre release.

Friable asbestos-containing material found within air plenums increases the hazard as fibres may be picked up by the air movement and spread throughout the building.

4.2 BULK SAMPLING

Generally, one sample should be taken for each room or area containing the same material. For large areas more samples should be taken. If there is material of a different texture or colour, it should be sampled separately.

A representative sample should be taken within the suspect material itself by penetrating the entire depth. This kind of sample is called a "bulk sample."

4.2.1 Procedures

(1) Precautions must be taken when obtaining bulk samples:

(a) An approved respirator will be worn. (*See Category III, Page 25.*)

(b) Other workers in the immediate area (5 m) of the sample location will temporarily vacate their work stations. Preferably, samples should be taken when the area is not occupied.

(2) Use a small, tight container; such as, a plastic 35-mm film cannister, or a "Zip-Lock" bag that is clean and dry.

(3) Remove a sample of the material using a core sampler or a knife. Be sure to penetrate paint or protective surface and all layers of material.

(4) Tightly close the sample container, wipe the exterior with a damp cloth.

(5) Tape the container to prevent accidental opening.

(6) Label the container with the sample location, or sample code.

(7) Asbestos sample data sheet must accompany all samples (*Figure 3*)

(8) Place identification tag on sample location (*see Section 4.3.2*)

(9) Sample area must be cleaned up and materials appropriately disposed (cloths, gloves, drop sheets, etc.)

(10) If local test facilities are not available, samples and data sheets may be sent to:

Saskatchewan Power Corporation
Safety and Occupational Health Division
2025 Victoria Avenue
Regina, Saskatchewan S4P 0S1

4.2.2 Sample Retention

(1) Samples on site (e.g., power plants) slides will be dated and coded with sample number and retained on file for five years or when action has been taken.

(2) Portions of each sample (e.g., 1 ccm) will be placed in a heat sealed bag, dated and sample coded, and retained on file for five years by user Department.

4.3 MARKING ASBESTOS MATERIAL

4.3.1 Objectives

(1) To permanently mark insulation at the point where it has been sampled for any future reference which may be necessary.

(2) To provide warning to all personnel of the presence in an area of material containing asbestos.

(3) To develop a marking system for insulation so that with reasonable ease it will be possible to determine the presence of asbestos, or, otherwise, of insulation along pipe runs or surfaces.

4.3.2 Methods

(1) Identification of Sample Point--brass disks of 1 - 1½" diameter sequentially numbered from the lab sample identity book--will be attached to the pipe or surface at the point of insulation by either nylon braided band (*see reference 1*), tie wraps, or by one or more interconnected stainless steel hose clamps where ambient temperatures or surface temperatures would destroy the plastic fixings. For flat surfaces, an expanding toggle device (*reference 4*) can be inserted before the sample hole is filled with liquid insulation.

FIGURE 3

ASBESTOS SAMPLE DATA SHEET

NAME OF FACILITY SAMPLED: _____

ADDRESS: _____

PERSON IN CHARGE: _____

TELEPHONE NUMBER: _____

NAME OF PERSON TO RECEIVE RESULTS: _____

ADDRESS: _____

SAMPLES COLLECTED BY: _____

NO. OF SAMPLES SUBMITTED: _____

SAMPLING LOCATIONS	SAMPLE NO.	DATE & TIME SAMPLED	SUSPECTED TYPE	ESTIMATED QTY. ON HAND (kg)

RESULTS

Sample No.	Asbestos Present?	Details of Analysis

ASBESTOS SAMPLE DATA SHEET
AIR SAMPLES

NAME OF FACILITY SAMPLED: _____

ADDRESS: _____

PERSON IN CHARGE: _____

TELEPHONE NUMBER: _____

NAME OF PERSON TO RECEIVE RESULTS: _____

ADDRESS: _____

SAMPLES COLLECTED BY: _____

NO. OF SAMPLES SUBMITTED: _____

SAMPLING LOCATIONS	SAMPLE NO	DATE & TIME SAMPLED	CONCENTRATION f/cc

(2) In any area where insulation or other material has been tested, and the presence of asbestos has been confirmed in other than insignificant trace quantities, the area will be posted by adhesive asbestos warning labels (*reference 5*) on the columns in that area, much in the way hearing protection warnings are currently posted. On large flat surfaces, it is permissible to seal the surface with a rubber or other sealer and to apply the self-adhesive labels directly to this prepared surface.

(3) Overall Insulation Identification System--where it is required to have the majority of the pipe length marked and where the types of insulation might change along the length of the pipe, a boundary marker and colored stencil markings are to be used so that the changeover points shall be obvious and the nature of the material either side of this point shall be immediately recognizable. The density of marking of pipe work with the warning or asbestos-free signs should be left to the requirements of the local Occupational Health Committee and the importance of the area. For some pipe work, repeater signs every 10 feet would be advisable; whereas, for other less accessible pipe work, much greater lengths can be left with no marker for assumption of the insulation type.
Where asbestos is present, a red florescent paint (*reference 6*) and a stencil bearing the words "asbestos" (*reference 7*) shall be used for marking. For all asbestos-free situations, a green florescent paint (*reference 8*) and a stencil bearing the words "non-asbestos" (*reference 9*) shall be used. These stencils can be used for the repeater system and, also, with a florescent band, can be used to mark the demarcation between asbestos and non-asbestos insulation (*see reference drawing attached*).

4.3.3 Management

In order for the marking system to have some validity in the work place and for the markings to only be removed by authorized persons, the following rules would need to be made and followed locally:

(1) No insulation will be broken until it has been categorized as:

(a) asbestos free;
(b) asbestos containing, and the required safety precautions have been prepared; and
(c) where the nature of the insulation is unknown, until it has been either--treated as (b) above, or a test has been taken to determine its identity.

(2) Sample point marking tags will never be removed or forced or levered to change their position. Where, due to work in hand, it is necessary to remove a tag, it will be removed by the foreman or person in charge of that job. When the job is completed, if the insulation is little changed from the situation prior to the job, the tag will be replaced. Where insulation has been changed for some other type, the tag will be passed to the laboratory with some written detail of the changes made so that the long-term record of insulation testing can be kept up to date.

(3) All re-insulation jobs will involve non-asbestos insulation. These should be marked by the stencil-and-paint method in all cases so that the safety level of that area can be demonstrated.

(4) On a routine basis, samples of insulation material in use by contractors for any job will be sampled on a regular basis to ensure that they are "asbestos free" as the job requirements will say. Samples of insulation delivered to stores will also be treated on a regular basis.

4.3.4 References

Reference 1: *Nylon strapping from*
Sammuel Strapping Systems
7314 - 44 Street
Leduc, Alberta
T9E 2Z3
(403) 986-7270

Strapping is ½ inch and embossed finished 0.38 mm thick. One coil equals 9000 feet.

Reference 2: *Tie-wraps as used by electrical department or available from Radio Supply in Regina.*

Reference 3: *Stainless hose clamps, where necessary to make these fit larger circumference pipes, a number may be interconnected.*

Reference 4: *Toggles available from hardware stores (see attached diagram). These devices have spring-loaded arms which form a "T" and are normally used for hanging from hollow walls and doors, etc.*

Reference 5: *Asbestos warning signs. These are Brady type 76230 and are available from Radio Supply in Regina.*

Figure 4

TYPICAL BOUNDARY LINE MARKING

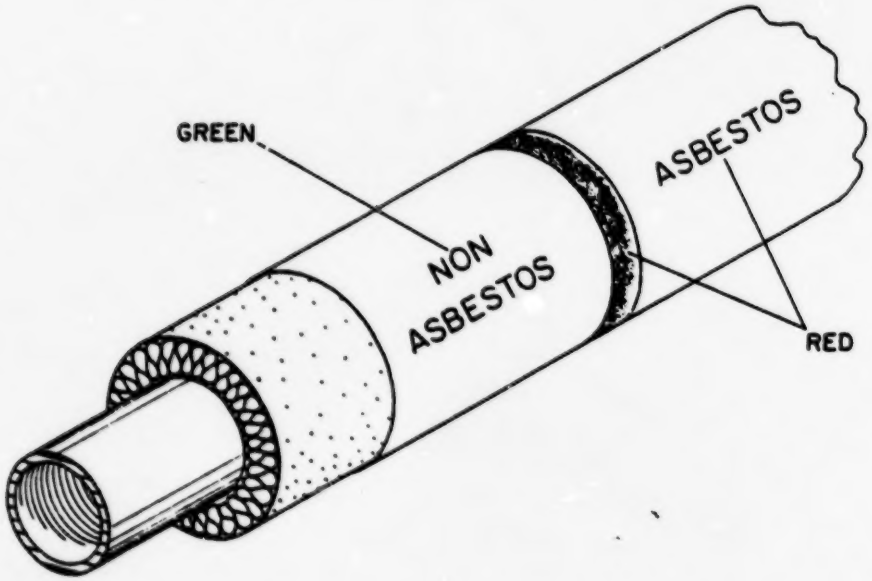

USE OF TOGGLE TO MARK FLAT SURFACE SAMPLE LOCATIONS

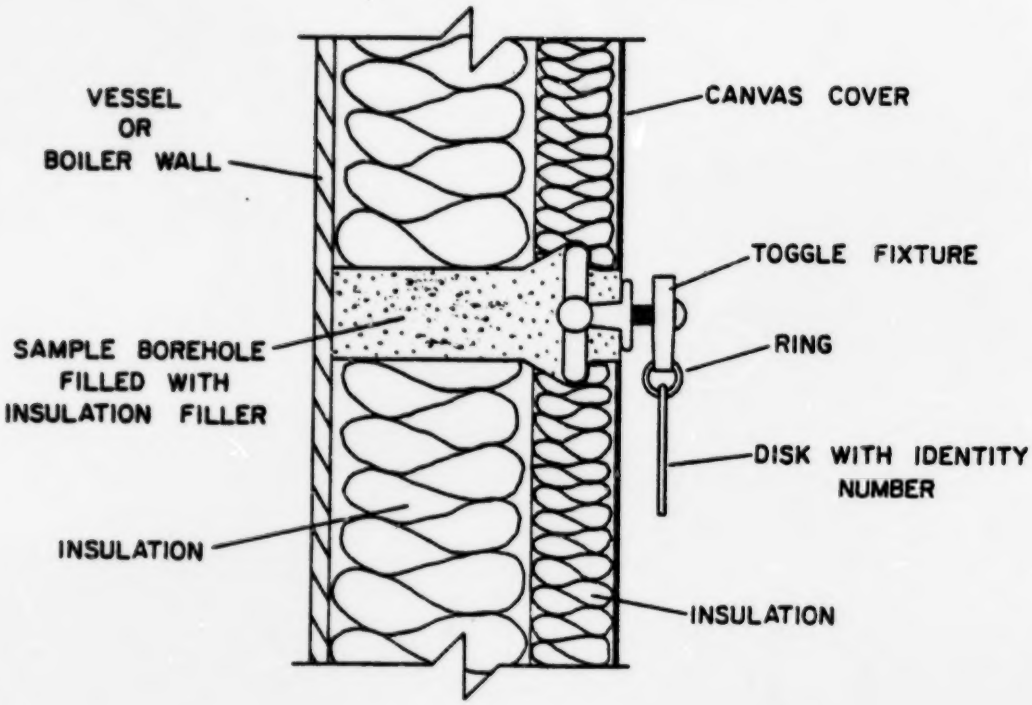

Figure 5

STENCILS FOR PIPE INSULATION MARKING

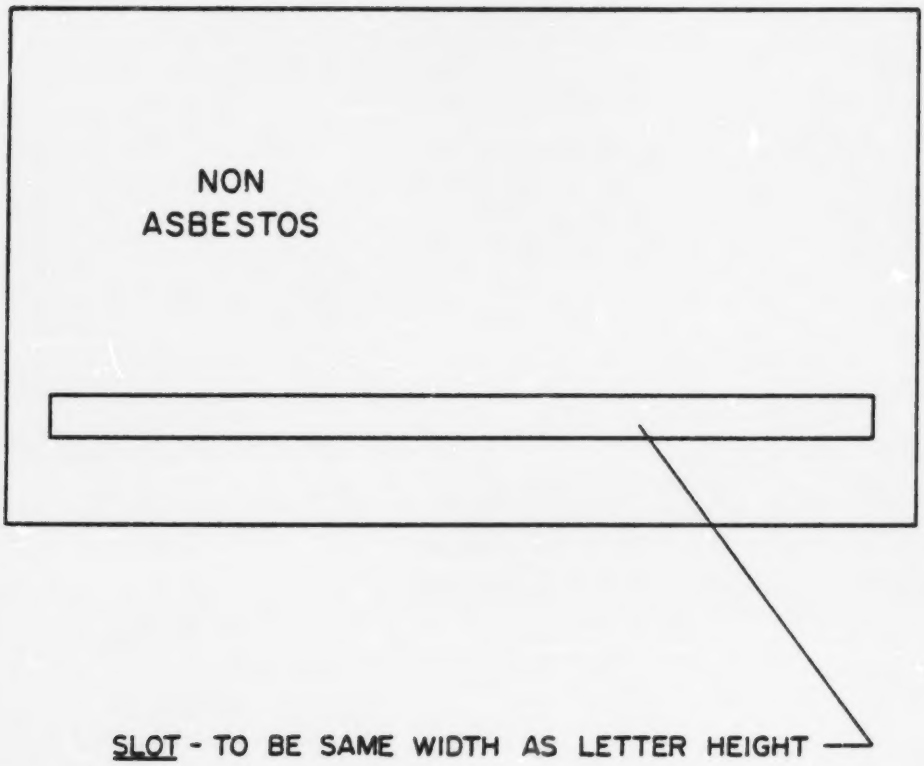

NOTE - THREE SIZE STENCILS REQUIRED

LETTERS TO BE - 1/2", 1 1/2", & 3".

Reference 6: *Red florescent paint--General Paint--spray bomb (Titan Red 97284).*

Reference 7: *Asbestos stencil. These will be available in ½-inch, 1½-inch, and 3-inch letters from:*
Visual Image Productions
P.O. 771
Regina, Saskatchewan
S4P 3A8
Phone: 522-4056
The reference numbers will be attached to the first shipment.

Reference 8: *Green spray paint--General Paint spray bomb (Turf Green 97283)*

Reference 9: *Non-asbestos stencil. Lettering installed similar to Reference 7 and, also, obtained from Visual Productions.*

4.4 RECORDS OF ASBESTOS

4.4.1 Plants (and areas not under jurisdiction of Corporate Services)

- Shall keep a detail account of asbestos location, sample codes, times, and results; and these records will be available to workers at all times.

4.4.2 Buildings (under jurisdiction of Corporate Services)

(1) Shall keep records of identified asbestos in buildings, facilities.

(2) Maps and drawings of such buildings shall contain a warning of asbestos.

(3) Duplicates of records and updates shall be supplied to Safety and Occupational Health division.

4.4.3 Air Sampling

- Safety and Occupational Health Division shall establish and maintain a log of air sample results in Corporate facilities.

4.4.4 Records

- All records of bulk- and air-sample analysis should be made available on a routine basis to the appropriate co-chairpersons.

> The Occupational Health and Safety Act--Section 13, dated April 14, 1981, 28. (2) states
>
> Every employer shall ensure that the worker representatives on the committee or, where there is no committee, the workers are kept fully informed of any information in the employer's possession concerning the work environment and the occupational health and safety of workers at that place of employment, including the general results of any environmental or biological monitoring, but no information of a personal medical nature is to be disclosed without the informed consent of the person to whom the information relates.

5.0 WORKER PROTECTION

Employees must be informed through training of potential asbestos hazard and work-procedure requirements. A copy of work procedures will be provided. Asbestos work areas should be readily identified by signs so that unnecessary exposure can be avoided. Personal hygiene and good housekeeping practices will be observed. These include the use of separate lockers; disposable clothing (head coverings, gloves, and foot coverings as necessary); and wet wiping and vacuuming. Respiratory protection is necessary to provide worker protection against inhalation of asbestos dust. Those who use respirators should be knowledgeable of contamination levels in the workplace, the protection factor of the protective device, their ability to wear a respirator, and the condition of the respirator.

5.1 RESPIRATORS

The efficiency of the filtration system of the respirator and the facial fit must be considered in selecting the appropriate respirator for a given task. The term "approved" applies to the construction of the respirator itself and to the conditions of use. Respirators approved by the National Institute for Occupational Safety and Health (NIOSH) for protection against asbestos-containing dust are acceptable for use; and approvals from other jurisdictions will be considered if acceptable to the SPC and the Saskatchewan Labuor.

5.1.1 Categories

Category 1

Supplied air, positive pressure full facepiece respirator (airline) provide the greatest degree of worker protection. The positive-pressure operation of the respirator greatly reduces the possibility of leakage of contaminated air into the respirator facepiece. For this respirator breathing quality air is supplied from compressed air tanks or from an air compressor drawing air from an uncontaminated source. Where breathing air is supplied from a piston compressor, smoke, oil, and water filters must be placed in line and the compressor should be in good condition so as to prevent carbon monoxide gas being formed from burning oil. An "oiless" compressor is recommended.

Compressors must supply air of at least 115 l/min (4 cfm) per respirator for tight fitting facepieces and 170 l/min (6 cfm) per respirator for loose fitting hoods.

Category 2

Powered, air purifying (high efficiency filter) positive pressure dust respirators supply air to the facepiece, so reducing the chance of inward leakage at the facepiece. Contaminated air must be effectively filtered in order to provide the worker with a supply of clean air. Only high efficiency filters may be used with these respirators in asbestos related work. There have been problems with filter packs which are attached simply by friction fit due to loosening and/or falling off. For units where such a problem could arise, filter packs must be firmly attached to the power pack/blower assembly. Duct tape wrapped around the filter packs and power units has proved effective in preventing the filter packs from loosening.

(Note: Where category 1 and 2 respirator systems use hoods or helmets, a close fit must be assured around the neck or shoulders to prevent inward air leakage due to head movements.)

Category 3

Non-powered air purifying dust respirators filter asbestos dust from air entering the facepiece, but the air supply is induced by breathing. If the facepiece does not fit tightly to the face, leakage will permit contaminated air to bypass the filter. Attention to proper fit is essentail when using these respirators.

Category 4

Disposable lightweight face masks are air purifying respirators which, although more comfortable, do not provide assurance of a tight facial fit.

5.1.2 Choice of Correct Respirator

Category 1

To be used where asbestos dust cannot be adequately controlled by local ventilation or wetting and where workers will be exposed to considerable dust for extended periods. Removing wall and ceiling sprayed insulation and handling dry pipe insulation are typical examples of operations in this category.

Category 2

To be used:

(a) where category 1 equipment is not necessarily practicable due to space restrictions, or where its use presents a risk of physical injury to the worker; and

(b) where category 3 equipment is required daily as part of a regular work process.

Category 3

To be used where asbestos dust cannot adequately be controlled, but exposure is intermittent and infrequent. Typical examples would be the cleaning of asbestos debris from floors and furnishings; maintenance which involves incidental distrubance of asbestos; and the occasional cutting, griding, or drilling of asbestos-containing materials.

Category 4

To be used for potential exposures where the worker is not directly engaged on tasks causing disturbance of abestos; for example, during the inspection of asbestos surfaces.

The choice of a suitable respirator is important. It is equally important to ensure that they are maintained and cleaned. Each day after use they are to be thoroughly cleaned, examined for defects, and stored in an asbestos-free work area, preferably inside sealed containers.

Note: The use of respirators does not replace the requirements for engineering and process controls during asbestos work. The use of respirators is an additional requirement for workers. Airborne asbestos monitoring may indicate that more efficient respirators may be required during certain work procedures.

5.1.3 Further Details

For further details on care and use of respirators, refer to CSA Bulletin Z94.4-M1982, "Selection, Care and Use of Respirators." These are available at each Power Plant location or through the Safety and Occupational Health Division, Regina. The person designated for the use and maintenance of respirators in each plant will use this Bulletin as their guidelines.

5.2 CLOTHING

Protective clothing shall be made available to any worker as required by Section 112 of the Occupational Health and Safety Act Regulations. Available from General Stores:

(1) Disposable coveralls made of spun bonded polyolefin material such as Dupont's "Tyvek."

(2) Disposable foot and head coverings of the same material (polyolefin), or rubber boots that can be washed.

(3) Disposable gloves.

All disposable clothing after use shall be placed in appropriate containers for asbestos-containing refuse.

6.0 CONTROLLING THE HAZARD

6.1 GENERAL INFORMATION

Where a workplace is known to contain asbestos materials, the control of the hazard is accomplished by three general activities:

(1) The encapsulation, enclosure, or removal of asbestos materials.

(2) Daily cleaning of asbestos waste or dust produced in the workplace by vacuum cleaning or the wet method.

(3) Maintenance of asbestos surface in good condition by immediate resealing or other actions necessary to eliminate the breaking-off of asbestos, or the release of asbestos dust.

Part XI, Section 114, of the Occupational Health and Safety Act Saskatchewan states:

> 114.--(1) Every employer shall ensure that:
>
> (a) every asbestos surface is kept in good condition and any repairs or sealing necessary to prevent the breaking-off of asbestos or the release of asbestos dust is done immediately;
>
> (b) no asbestos surface is disturbed for the purpose of maintenance, replacement, removal or repair until it is thoroughly wetted throughout its entire thickness;
>
> (c) where it is not practicable to comply with clause (b), the asbestos surface is kept wet as it is being disturbed or effective means are used to capture, at source, any dust created by the disturbance.
>
> (2) In respect of any asbestos process including replacement, maintenance, removal or repair work to an asbestos surface, the employer shall ensure that:
>
> (a) the area is screened off or otherwise enclosed, so far as is practicable, to prevent the escape of asbestos dust to any other part of the place of employment and that a warning notice is prominently displayed indicating that asbestos work is in progress; and
>
> (b) asbestos materials removed are place in impervious receptacles, sealed and labelled clearly, "ASBESTOS."

Section 113 of the same Act states:

> 113. Every employer shall ensure that:
>
> (a) asbestos waste or dust produced in any place of employment is cleaned away promptly and at least once each day by vacuum cleaning equipment to prevent the escape of asbestos dust into the air or, where vacuum cleaning is not practicable, by wet method;
>
> (b) no loose abestos or asbestos waste is kept or conveyed within or out of a place of employment except in impervious, closed receptacles labelled clearly "ASBESTOS"; and
>
> (c) every worker engaged in the cleaning of asbestos waste or dust is provided with and wears personal protective equipment as required by section 112.

6.2 THE REMOVAL, ENCAPSULATION, OR ENCLOSURE OF ASBESTOS

Definitions

(1) Removal--Involves the wetting, removal, collection of asbestos-containing materials from the supporting surface.

(2) Encapsulation--Involves coating asbestos-containing material with a bonding agent. Penetrating and bridging sealants are two types used to prevent fibre release from the asbestos material.

(3) Enclosure--Involves erecting barriers between asbestos-containing material and the building environment using material; such as, gypsum board, plywood, metal, or cloth wrap.

6.2.1 Worker Preparation

(1) Workers involved in the procedure must be fully informed of the adverse health effects of asbestos. Written instructions must be provided detailing required procedures with a copy of these instructions readily available at the work site.

(2) It is necessary that a competent supervisor be at the work site at all times to ensure that work procedures are executed in a proper manner.

(3) Full-body disposable coveralls, caps, rubber boots, or easily decontaminated footwear must be worn by all workers entering the work area. If necessary, other protective devices--such as, goggles and hard hats--must also be worn.

(4) Approved respirators must be provided by the employer and worn by all employees entering the work area. All workers must be familiar with the correct use and limitations of the respirators. Respirators must be properly fitted and maintained. Beards, sideburns, and moustaches which interfere with the fit of the respirator are unacceptable.

6.2.2 Site Preparation

(1) General

(a) Adequate provisions must be made to prevent the spread of fibres to adjoining areas. The use of polyethylene sheeting or similar impervious material is considered acceptable. All supply- and return-air vents must be blocked off to prevent contamination of the ductwork.

(b) In some instances, it may be necessary to provide a slight negative pressure in the work area. This should ensure that contaminated air does not seep into adjacent areas. Fans used to provide negative pressure must be vented to the outside through an effective filter system.

Heating and ventilation systems must be sealed off to prevent contamination of the duct work. If it is possible, the system should be turned off.

A slight negative pressure applied to the work area using an exhaust system with effective air filtration (two-stage--HEPA) is desirable.

A decontamination area with a changeroom, shower, and an equipment area must be provided. (*see following Figure 7.*) Separate storage and facilities must be supplied for street and work clothes.

FLOOR PLAN FOR A TYPICAL ASBESTOS REMOVAL ENCLOSURE OR ENCAPSULATION WORK SITE

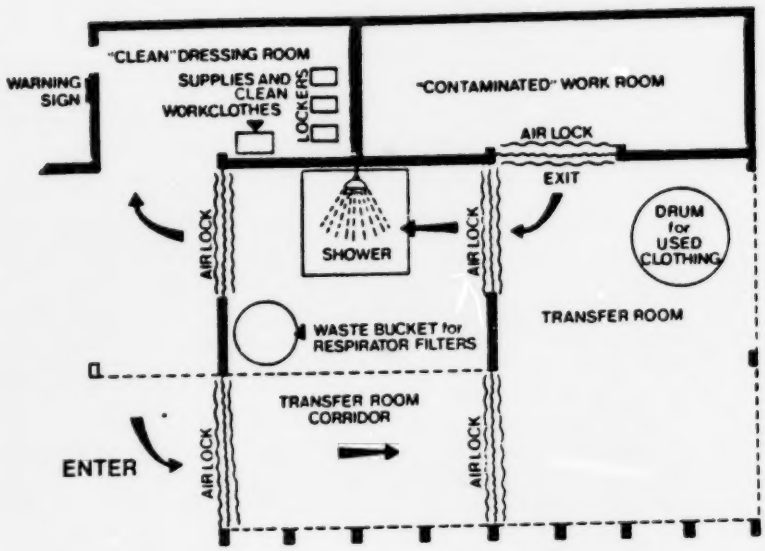

(2) Work Routine

(a) Only authorized personnel are allowed in the work area. Notices must be posted around the perimeter of the area and at the entrance to the work site (5 m), designating it as restricted.

(b) All workers entering the work areas must change into coveralls, footwear, caps, and approved respirators.

(c) If encapsulating, then procedures must be carried out in accordance with sealant manufacturers' instructions and in such as fashion as to minimize damage to the asbestos surface.

(d) If enclosing, then the application of the enclosure should be carried out in such a fashion as to minimize the damage to the asbestos-containing surface.

e) If removing asbestos, then the asbestos surface must be completely wetted down and thoroughly soaked with water containing a wetting agent. Coverings that cannot be penetrated must be punctured to allow thorough soaking.

The soaked material should be removed in a systematic fashion by scraping or similar means. No sandblasting or other air driven techniques are permitted.

Workers must ensure that removal is complete and no asbestos-containing material remains on pipes or surfaces.

Removed material should be placed immediately into plastic bags or drums while still wet to prevent the spread of fibres. Full plastic bags should be placed into another "labelled: bag. This should be done in the transfer area to ensure the contamination on the outside of the original bag is not spread.

(3) Wetting

(a) Wetting is a very effective means of dust control. Compared to dry operation, dust levels may be reduced by a factor of 10 when wetting is effectively carried out. Wetting should be done with a fine mist and time allowed for the water to soak through the asbestos materials. Asbestos materials must not be over saturated to the point of becoming slurry.

(b) A chemical wetting agent may be added to water to enhance the effectiveness of the wetting process.

(c) The U.S. Navy has developed a method of fibre control for removal of asbestos using a water/glycol mix--which is injected into the pipe lagging.

The glycol prevents the premature drying of insulation being removed and, thus, restrains the friable fibres. This method has proved very successful; and further details may be obtained from U.S. Navy Procedure #DNS-686 which is available at each plant location, or from Safety and Occupational Health Division, Regina.

(4) Vacuuming

(a) Vacuuming is utilized in asbestos operations for clean-up of residual materials on the floor, equipment, or clothing at least once per day. The device used should be an approved type to avoid recontaminating the workplace. It should have appropriate extensions and adapters to ensure all work locations are accessible; and, must be used SOLELY for asbestos work.

(b) Personnel who exit from the asbestos work area should vacuum off before removing their clothing.

(c) When full, filter bags are treated as asbestos wastes. They must be placed in labelled and sealed plastic containers for disposal in approved landfill sites.

(d) Equipment with filters approved by NIOSH or other government agencies are considered suitable for removing abestos (e.g., "Minute-Man" asbestos vacuum, made by American Cleaning Equipment Corporation, distributed by Sinclair MacDonald Products Ltd., 112 Doncaster Avenue, Thornhill, Ontario, L3T 1L3, or Nilfisk Vacuum available from Nilfisk Ltd., 200 Connie Cres., Unit #7, Concord, Ontario, L4K 1M1.

6.2.3 General Rules

Contents of the work area--such as furniture or machinery--must be removed or covered with heavy duty plastic sheeting.

Any debris which may have been dislodged during the spraying must be disposed of in a sealed container (6 mil plastic bag).

There will be no eating, drinking, or smoking in the work areas as this requires removal of respirators.

The presence of the hidden asbestos under sealants or enclosures must be recorded to ensure that adequate precautions will be taken if future alterations, renovation, maintenance, or demolition occurs.

Provisions must be made to ensure compliance with all applicable codes and regulations; such as, Fire, Building, and Occupational Health and Safety Regulations.

6.2.4 Personal Decontamination

(1) Before leaving the work area for any reason, the worker must perform all decontamination procedures.

(2) Visible contamination from clothing must be removed by using a damp cloth, gentle brushing, or vacuuming.

(3) In the transfer room, all clothing and protective apparel--except the respirator--are to be removed.

(4) The worker enters the shower with the respirator initially still in place.

(5) After the head, face, and respirator are thoroughly washed, the respirator is removed; and if the respirator is a "cartridge" type, the used filters are discarded in a waste basket.

(6) Following a complete shower, the worker proceeds to the "clean" dressing room to put on street clothing.

6.2.5 Work Area Cleanup and Decontamination

(1) All contaminated tools and equipment must be thoroughly washed and/or vacuumed. Disposable clothing and all non-reusable materials must be placed in labelled heavy duty plastic bags.

(2) Bagged asbestos waste must be removed from the work site (*See Section 7.0, "Transport Disposal of Asbestos Containing Refuse"*).

(3) To minimize asbestos contamination, polyethylene sheeting enclosing the areas must not be removed until a concentration of less than 0.01 fibres per cubic centimeter (fibres/cm^3) is obtained. This level is achieved through:

   (a) careful adherence to proper procedures as outlined; and

   (b) removal of fibres by purging the air in the contaminated area and/or allowing sufficient time to elapse to ensure adequate settling of the fibres with subsequent cleanup procedures.

(4) All exposed surfaces in the work area must be cleaned. A thorough vacuuming of all floors and surfaces is necessary to ensure adequate cleanup. Vacuum refuse must be soaked and disposed of in plastic bags.

(5) When airborne asbestos levels are acceptable, the enclosures may be removed. The sheeting should be folded so that the contaminated side is inside. It should then be placed in bags or drums, labelled, and disposed of along with other refuse.

6.3 REMOVAL OF LIMITED AMOUNTS OF ASBESTOS FOR EQUIPMENT REPAIR

6.3.1 Worker Preparation

All workers entering the work area must change into suitable work clothes and wear approved respirators.

6.3.2 Workplace Preparation

(1) Asbestos operations must be physically isolated or screened off with plastic drop sheeting, curtains, or other appropriate materials. Precautions must be taken to eliminate any asbestos dust fallout to floors below.

(2) Whenever possible, a roped barrier must be placed around the area to prevent non-asbestos workers in this vicinity. The distance between the roped barrier and the worker location should be at least 5 m.

(3) Caution signs must be placed at the entrance to the work location and should be highly visible. These signs must state, "Caution--Asbestos Work in Progress--Do Not Enter" [(SPC Stock Code #05-646-416) (12" x 14")].

6.3.3 Work Routine

(1) Only authorized personnel are allowed in the work area. Notices must be posted around the perimeter of the area, designating it as restricted.

(2) All workers entering the work areas must change into coveralls, footwear, caps, and approved respirators.

(3) If encapsulating, then procedures must be carried out in accordance with sealant manufacturers' instructions and in such a fashion as to minimize damage to the asbestos surface.

(4) If enclosing, then the application of the enclosure should be carried out in such a fashion as to minimize the damage to the asbestos-containing surface.

5) If removing asbestos, then the asbestos surface must be completely wetted down and thoroughly soaked with water containing a wetting agent. Coverings that cannot be penetrated must be punctured to allow thorough soaking.

The soaked material should be removed in a systematic fashion by scraping or similar means. No sandblasting or other air driven techniques are permitted.

Workers must ensure that removal is complete on the stripped area and no asbestos-containing material remains on pipes or surfaces.

Temporary encapsulation of the exposed "ends" shall be done and kept in place until permanent installation of insulation is completed.

Removed material should be placed immediately into plastic bags while still wet to prevent the spread of fibres. Full plastic bags should be placed into another "labelled" bag.

6.3.4 Personal Decontamination

(1) Before leaving the work area for any reason, visible contamination must be removed from clothing by using a damp cloth, gentle brushing, or vacuuming.

(2) At the end of the work shift, workers must remove work clothes, leave them at the work site, and shower before changing into street clothing. (If disposable clothing is used, it must be disposed in the approved method in labelled "asbestos" plastic bags.)

6.3.5 Work Area Cleanup and Decontamination

(1) All contaminated tools and equipment must be thoroughly washed and/or vacuumed. Disposable clothing and all non-reusable materials must be place in labelled heavy-duty plastic bags or drums.

(2) Bagged asbestos waste must be removed from the work site (*See Section 7.0, "Transport Disposal of Asbestos Containing Refuse"*).

(3) All exposed surfaces in the work area must be cleaned. A thorough vacuuming of all floors and surfaces is necessary to ensure adequate cleanup. Vacuum refuse must be soaked and disposed of in plastic bags or drums.

6.4 INSPECTIONS

6.4.1 Annual

Any Corporate facility known to have asbestos-containing materials shall be inspected visually at a minimum of once per year. This inspection will be accompanied by an air sample.

6.4.2 More Frequent

Local Occupational Health and Safety Committees or the Division of Safety and Occupational Health may request more frequent inspections.

6.5 AIR SAMPLING

It is necessary to know the concentration of airborne asbestos in the workplace. The effectiveness of asbestos controls can be verified by airborne asbestos monitoring. Air samples may be collected in the breathing zone (within a 30-cm radius from the nose) of a worker to determine exposure. Area samples can also be collected in areas to determine the effectiveness of methods to prevent the release of asbestos.

If this information is not available, air sampling for asbestos should be carried out. For routine work of a well-defined nature with little variability, representative asbestos concentrations should be done regularly. Sampling should consist of both personal and area concentration determinations. Non-routine work sampling should be done while work is in progress.

Examples of the uses of airborne asbestos monitoring are:

(1) Adjacent to the exterior of an enclosure which has been erected around an asbestos removal or repair process to indicate whether the enclosure is effectively preventing the release of asbestos into the surrounding work area.

(2) A personal sample collected in the breathing zone of a worker during the removal of asbestos insulation by the worker. Such a sample will indicate whether the wetting of the insulation during removal is preventing the release of asbestos dust.

(3) Adjacent a vibrating, asbestos-containing surface; such as, a boiler. The effectiveness of the exterior wrap of the asbestos boiler insulation can be assessed.

In 1984 February, the National Institute for Occupational Safety and Health (USA) issued method 7400 to determine airborne asbestos. The limit of detection for the 7400 method depends on the volume of air sampled (sample time x sampling flow rate). The limit of detection for a four-hour sampling time at 2 litres per minute sampling flow rate will be approximately 0.006 fibres per cubic centimetre of air.

Airborne fibre concentrations above the limit of detection normally indicates that asbestos is being released into the air; and, thus, the cause should be ascertained and remedied. At the limit of detection of the method, it can be ascertained that fibres are being released; however, the actual fibre concentration quoted is unprecise. For quoting precise data (i.e., to form the choice of respirators), the lower range of the 7400 method for the sampling criteria cited previously is .008 f/cc.

Some asbestos fibres are normally present in any air. A recent publication by the National Research Council (USA) estimates that background asbestos concentrations are in the range of 0.0004 to 0.002 f/cc. However, it would be difficult to measure such levels precisely using the NIOSH 7400 method (or any other microscope fibre counting methods).

Results of the sampling program should be posted in appropriate locations as soon as they are available.

The SPC Safety and Occupational Health Divison will either--conduct air samples, <u>or</u> train local personnel in the proper procedures to obtain samples in the workplace. Other Government Agencies <u>or</u> private firms may also be requested to undertake this program at the request of the Safety Divison from time to time.

6.5.1 <u>Sampling Equipment</u>

(1) <u>Sampling Pump</u>--This will be a powered pump with the features listed below:

(a) capable of delivering, for a full sample period, at least 2 litres of air per minute with an accuracy of ±5 percent;

(b) explosion proof when used in a potentially explosive atmosphere;

(c) has a flow meter, volume meter, or a mechanism for maintaining a recommended flow rate;

(d) has an on/off switch, which is as tamper proof as necessary. MSA Model S and Dupont Model P2500 or equivalent are acceptable.

(2) Sampling Medium--This consists of 25-mm filter holder, 0.8-pore size cellulose ester filter, and a filter support pad.

The filters may be purchased directly from the Millipore Company in Mississauga, Ontario. The cassettes with or without filters are available from Levitt Safety or Safety Supply. The Safety and Occupational Health Division, Regina, will keep a reasonable supply of cassettes and filters on hand as delivery from the supplier can be about three months.

6.5.2 Sampling Method/Procedure

The air is to be sampled in accordance with NIOSH (National Institute for Occupational Safety and Health) analytical methods, NIOSH 7400, for asbestos fibres in air.

(1) Preparation of Pumps

(a) In battery-operated pumps, the battery pack must be fully charged before use.

(b) Flow meters, volume meters, or constant flow devices on the pumps must be calibrated and marked or adjusted between 2.0 and 2.5 litres per minute.

(c) If local facilities are not available for calibration, pump calibration will be checked periodically by the Safety and Occupational Health Division.

(2) Preparation of Filter Assembly--Millipore filter and holder are preassembled. However, check that the filter and support pad are properly assembled in the cassette. Prior to sampling, seal the lower two sections by tape or cellulose bands and identify by appropriate sample number. This should be done in a clean environment. Code numbers for sampling for various locations shall be obtained from the Safety and Occupational Health Division, Regina.

(3) Sampling

(a) Assemble the sampling train by fixing one end of the flexible tubing to the inlet port of the pump and the other end to the outlet port of the filter holder by means of the adapter. (*See Figure 6.*)

(b) Check for air leaks in the sampling train by turning on the pump and sealing the inlet port of the holder. Check for air leaks in the sampling train by turning on the pump and sealing the inlet port of the cassette with the plastic plug provided with the cassette. The use of a finger to seal the inlet port momentarily could contaminate the filter and, therefore, must not be performed. The flow indicator on pumps with flow or volume meters should drop to the zero position and oscillate slightly; on pumps with constant flow devices, however, the pumping speed should increase to a maximum. If this does not occur, find the faulty component and either--repair the air leak, if possible, or replace the component.

(c) For personal samples, attach the pump to the worker's belt, or place it in his pocket; draw the flexible tubing over the shoulder; and fix the holder within the breathing zone, ensuring that the face of the holder is pointing downward. Ensure the equipment is not interfering with the worker's normal duties. For area samples, place the filter 1.5 m above floor using tripods or other support devices. The filter should be pointing downward.

(d) Recheck that the filter and support pad are properly assembled. Remove the top portion of the three-part filter assembly so that the filter is fully exposed to air; and, then, switch on the pump. Do not, under any circumstances, separate the bottom and the centre parts of the filter assembly. Allow the flow rate to stabilize. If necessary, adjust the flow rate to 2.0 to 2.5 litres per minute or as marked. (*See Figure 7.*)

(e) At least one blank filter should be provided for every 10 sample filters submitted for fibre counting. Remove the caps from the field blank cassettes and store the cassettes in a clean area during the time that air samples are being collected. Replace the caps in the cassettes when the air sampling is completed. (Fibres which may be on the hands of the person performing the sampling will just as likely be deposited on the blank filters as on the sample filters. The use of blanks allows for correction in the fibre counting due to such inadvertent contamination of samples).

FIGURE 6

SAMPLING SYSTEM

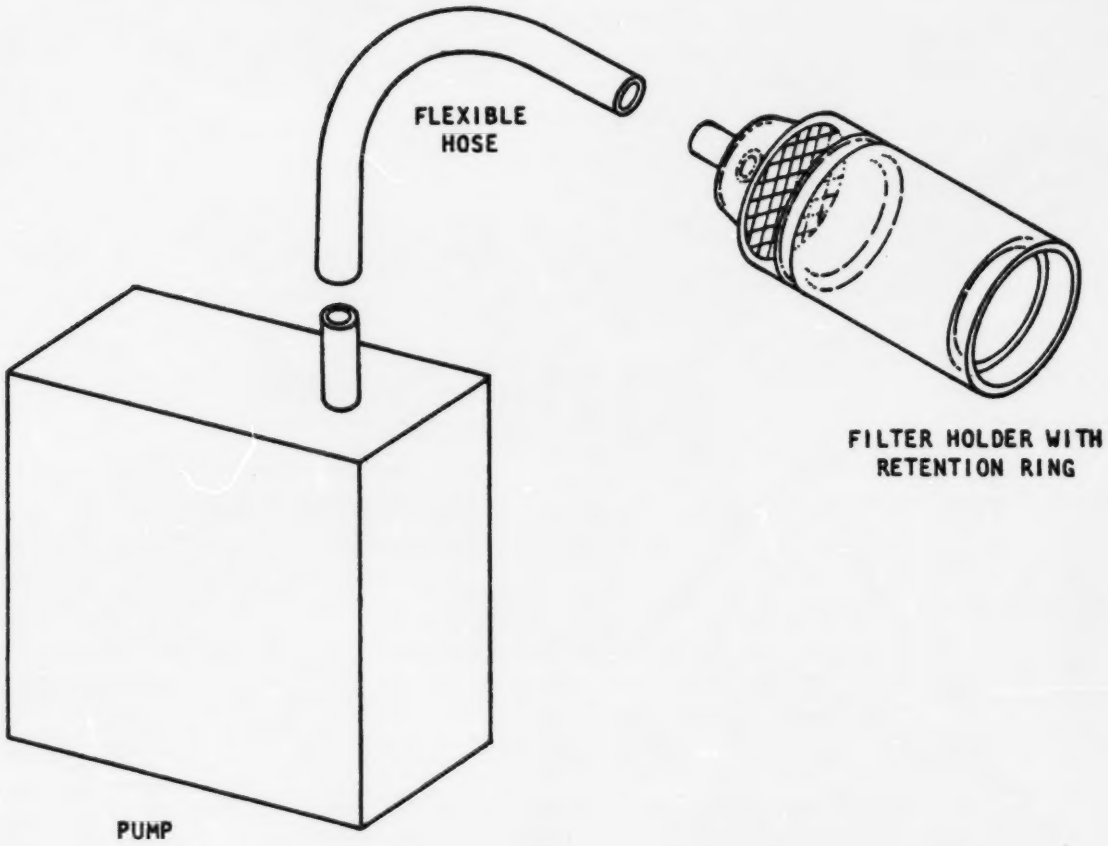

EXPLODED VIEW

FIGURE 7

THE 25 mm FILTER-HOLDER CASSETTE
WITH 50 mm RETENTION RING

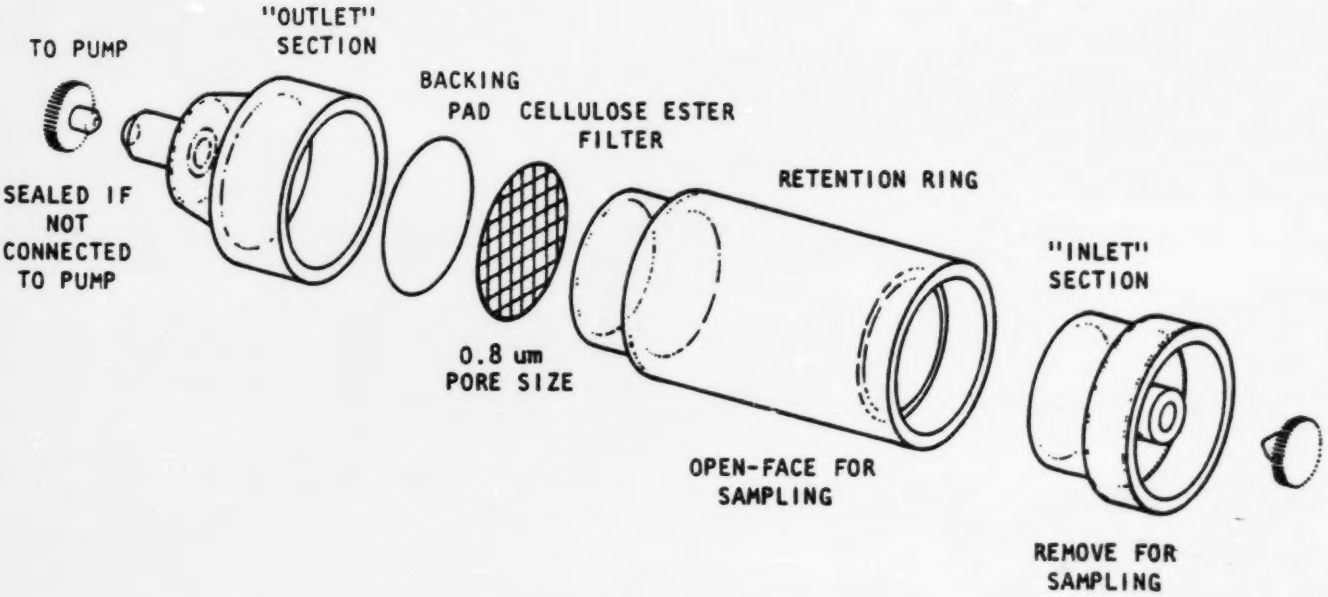

EXPLODED VIEW

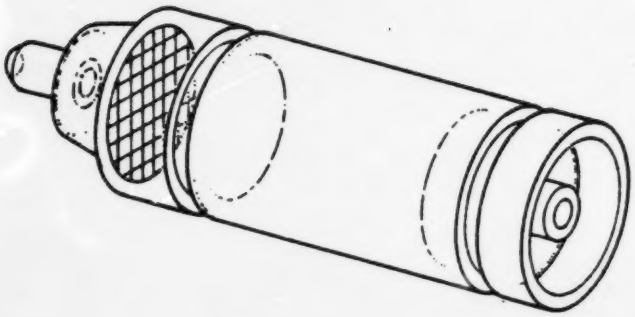

ASSEMBLED, BUT NOT SEALED

(f) Sampling time for each area sample should be four (4) hours. If previous sampling experienced dust overloading, then sample time may be shortened.

(g) Sampling equipment placed should be checked periodically to ensure it is functioning properly. The air-flow rate should not be readjusted while sampling is in progress.

(h) Re-insert the top portion of the filter assembly and cap both the inlet and the outlet holes with the plastic plugs provided. Seal the top section of the cassette to the lower sections of the cassette with electrician's tape or with masking tape. Follow the same sealing procedure for samples and blanks.

(i) Ensure air sampling data card (*Figure 8*) is completed in detail upon termination of sampling at each location. This card must accompany each sample.

Figure 8

SASKATCHEWAN POWER CORPORATION
SAFETY AND OCCUPATIONAL HEALTH DIVISION
2025 Victoria Avenue, Regina, Saskatchewan, Canada S4P 0S1

SAMPLE AND ANALYSIS REPORT CARD

SAMPLE CODE:	SAMPLE NUMBER:
LOCATION:	DATE (Y/M/D): / / /
SAMPLING POINT AND CONDITIONS:	
TEST INSTRUMENT: MAKE: MODEL NO: CALIBR. DATE: / / SERIAL NUMBER:	SAMPLE ANALYSIS: ANALYSIS METHOD: ANALYSIS LAB: MAILING DATE: / /
TEST DATA: TIME ON _____ FLOW ON _____ TIME OFF _____ FLOW OFF _____ TEST TIME _____ MEAN F.R._____ AIR VOLUME _____	DATE OF ANALYSIS: / / CODE: ANALYSIS RESULT:
SAMPLING METHOD:	DETECTION LIMIT:
Collector's name:	Analyst's name:
DISTRIBUTION: White - Safety Division, Regina Blue - Laboratory	Yellow - Safety Officer Pink - User File Copy

(available from Safety and Occupational Health, SPC)

7.0 TRANSPORT AND DISPOSAL OF ASBESTOS REFUSE

Section 118, Part XI, of the Occupational Health and Safety Act, Saskatchewan, states:

> 118. Every employer shall ensure that any workers engaged in the disposal of asbestos wastes are adequately instructed in the safe means of handling those wastes and of their proper disposal in a manner that will not create a hazard to workers at the disposal site.

Guidelines

The Department of Environment has agreed to the following disposal guidelines:

(1) Double bagging of the waste product, or single bagging in heavy gauge polyethylene (6 mil or better and clearly labelled "asbestos"); or drums; transporting the bagged waste in appropriate containers to an acceptable sanitary landfill; and burial under supervision of municipal officials.

(2) The bagged waste is to be deposited into a trench, away from the working face of the landfill and in an area which will not be disturbed in the future. The trench should be approximately 10 feet deep with at least a 2-foot compacted cover of earth over the waste.

(3) Care should be taken so as not to damage the containers during the backfilling process.

(4) The site, where the waste is buried, shall be permanently marked and the location recorded for future reference to ensure that the wastes are not accidentally dug up.

(5) An "acceptable" sanitary landfill is one where the water table is low and the soil relatively impermeable.

(6) The proposed landfill for the particular waste in question should be assessed on an individual-case basis by the Department of Environment. However, landfills at Moose Jaw, Regina, and Saskatoon have been approved in the past for asbestos disposal. More recently (1984 May), an asbestos-disposal site at the Boundary Dam Power Station in Estevan has been approved.

Note: Prior approval from the local municipal officials must be obtained since they are responsible for the proper burial, mapping, and security of the site.

(7) Care must be taken in transporting asbestos refuse to prevent fibres from becoming airborne. It may be necessary to transport bagged refuse in a covered vehicle or under a tarpaulin.

(8) The driver of the transport vehicle must be fully informed of asbestos hazards in case the material becomes airborne. The driver must be provided with a respirator to be worn during emergencies or unloading when there may be an asbestos exposure. If bags are severely damaged in transport, the contents must be soaked and repackaged prior to dumping.

Note: Vehicles using container dumping or portable compaction shall not be used for transport in asbestos-containing material.

(9) The refuse should be buried immediately.

(10) Upon completion of the job, vehicles and reusable containers used in the conveyance of the asbestos refuse must be thoroughly washed.

(11) Other types of disposal--such as, wetting, dumping--into a plastic lined pit may be approved. Approval may be sought through the Director of Saskatchewan Power Corporation Environmental Programs.

For further information on approved sanitary landfill sites and disposal, contact:

Director
SPC Environmental Programs
2025 Victoria Avenue
Regina, Saskatchewan
S4P 0S1
Phone: 566-2877

8.0 MATERIALS MANAGEMENT

The Corporation has adopted a policy of purchasing or acquiring only non-asbestos material.

In some special applications, an acceptable reasonable substitute may not be available. If a non-asbestos alterrative is not found, then the product having the least likelihood of releasing fibres will be chosen.

> *"All employees who will be in contact with this material must be aware that it contains asbestos and instructed in proper work procedure including:*
>
> - *storage*
> - *installation or use*
> - *removal and disposal"*
>
> *"...and the search for a non-asbestos alternative shall continue."*

All persons who are responsible and accountable for the eventual procuring of material for use in the Corporation--be it through design, specifications, supply data, purchase approval, material acceptance, storage, use--are also responsible for ensuring that no asbestos -containing material is inadvertently obtained.

Asbestos-containing materials in Stores, Warehouse, etc., shall be clearly marked "Asbestos" and shall be isolated from the surrounding area by storage in suitable plastic containers (e.g., "Zip-Lock" bags) and shall be marked "Asbestos."

Damaged or out-of-date materials containing asbestos must be disposed in the proper manner. (*See Section 7.0.*)

9.0 PUBLIC PROTECTION AND ENVIRONMENTAL LIMITS

Discharges of asbestos into the air or water courses during the work process, or by spills during transport, are possible sources of hazard to the public.

For discharges into the air and public water system, every effort should be made to avoid or minimize such emissions by use of high-efficiency filters, or other methods; such as, recirculation. Following that, a review should be made to determine if releases meet the environmental standards or criteria.

Details of and assistance may be obtained from:

Director
Saskatchewan Power Corporation
Environmental Programs
Phone: 566-2877

10.0 GOVERNMENT REGULATIONS AND GUIDELINES

THE OCCUPATIONAL HEALTH AND SAFETY ACT
SASK. SECTION 13 - April 24, 1981

PART XI

ASBESTOS

Interpretation

107. In this Part:

"asbestos"

(*a*) "asbestos" means crocidolite, amosite, chrysotile, fibrous anthophyllite or any mixture containing any of these minerals;

"asbestos dust"

(*b*) "asbestos dust" means dust consisting of or containing asbestos fibers;

"asbestos process"

(*c*) "asbestos process" means any handling of materials containing asbestos and includes:

(*i*) the sawing, cutting, sanding or spraying of asbestos-containing materials;

(*ii*) the repair or maintenance of asbestos surfaces;

(*iii*) the cleaning or disposal of asbestos materials;

(*iv*) the mixing or application of asbestos shorts, cements, grouts, putties or similar compounds;

(*v*) the storing or conveyance of materials containing asbestos; and

(*vi*) the demolition of buildings or structures containing asbestos;

"crocidolite"

(*d*) "crocidolite" means crocidolite or any mixture containing crocidolite.

Application of Part

108. This Part applies wherever asbestos dust is likely to be released into the atmosphere where workers work.

Crocidolite prohibited

109. No crocidolite shall be used in any asbestos process.

Asbestos spraying prohibited

110. The spraying of insulation materials containing asbestos is prohibited.

Asbestos processes exhaust

111. Every employer shall, where it is practicable, ensure that:

(*a*) no asbestos process is carried out without exhaust ventilation which prevents, so far as is practicable, the dispersal into the air of asbestos dust; and

(*b*) exhaust ventilation equipment used or likely to be used regularly to contain asbestos dust is maintained and inspected at least once each week and is certified by a competent person at least once each year.

Protective clothing and equipment

112.—(1) Where it is not practicable to comply with section 111, the employer shall ensure that each worker who may be exposed to asbestos dust is provided with and uses:

(*a*) approved respiratory protective equipment;

(*b*) protective coveralls and headgear which, when worn, will exclude asbestos dust, and that protective clothing shall be disposed of after use or shall be kept, maintained and cleaned in a safe manner by the employer each time it is used.

(2) No employer shall permit or require a worker to perform work for which protective equipment is provided unless the worker has been fully instructed in the proper use of that equipment.

Cleaning of asbestos wastes

113. Every employer shall ensure that:

(*a*) asbestos waste or dust produced in any place of employment is cleaned away promptly and at least once each day by vacuum cleaning equipment to prevent the escape of asbestos dust into the air or, where vacuum cleaning is not practicable, by wet method;

(*b*) no loose asbestos or asbestos waste is kept or conveyed within or out of a place of employment except in impervious, closed receptacles labelled clearly "ASBESTOS"; and

(*c*) every worker engaged in the cleaning of asbestos waste or dust is provided with and wears personal protective equipment as required by section 112.

Maintenance of asbestos surfaces

114.—(1) Every employer shall ensure that:

(*a*) every asbestos surface is kept in good condition and any repairs or sealing necessary to prevent the breaking-off of asbestos or the release of asbestos dust is done immediately;

(*b*) no asbestos surface is disturbed for the purpose of maintenance, replacement, removal or repair until it is thoroughly wetted throughout its entire thickness;

(*c*) where it is not practicable to comply with clause (*b*), the asbestos surface is kept wet as it is being disturbed or effective means are used to capture, at source, any dust created by the disturbance.

(2) In respect of any asbestos process including replacement, maintenance, removal or repair work to an asbestos surface, the employer shall ensure that:

(*a*) the area is screened off or otherwise enclosed, so far as is practicable, to prevent the escape of asbestos dust to any other part of the place of employment and that a warning notice is prominently displayed indicating that asbestos work is in progress; and

(*b*) asbestos materials removed are placed in impervious receptacles, sealed and labelled clearly "ASBESTOS".

Warning to workers of hazards

115. Every employer shall ensure that all persons who, in the course of their employment, are likely to be engaged in an asbestos process or are otherwise liable to be exposed to asbestos dust are warned:

(*a*) of the dangers of admitting asbestos into the body in causing pneumoconiosis, lung cancer and mesothelioma; and

(*b*) that the risk of injury to health is increased by smoking.

Prohibition re minors

116. No employer shall permit a minor to work in any place where asbestos dust is likely to be released into the atmosphere except when that work is performed under close and competent supervision.

Warning labels on asbestos materials

117. At every place of employment, the employer shall ensure that any substance containing asbestos is clearly and prominently labelled "ASBESTOS", and that label must contain a warning of the danger to health from taking asbestos fibers into the body.

Disposal of asbestos wastes

118. Every employer shall ensure that any workers engaged in the disposal of asbestos wastes are adequately instructed in the safe means of handling those wastes and of their proper disposal in a manner that will not create a hazard to workers at the disposal site.

Medical examinations

119.—(1) Any worker regularly employed in an asbestos process is entitled, upon request to the employer, to be medically examined once in each year.

(2) Within one month after the day a request is received pursuant to subsection (1), the employer shall arrange for and pay the full cost of the medical examination, which must include:

(*a*) a comprehensive physical examination with special attention to the lungs;

(*b*) lung-function tests including forced vital capacity and forced expiratory volume at one second; and

(*c*) any further medical procedures that are necessary for the diagnosis of an asbestos-related disease.

(3) The findings of the medical examination described in subsection (2) shall be given by the physician to the worker and, upon the request of the worker, to a designated physician, but shall otherwise be kept by the examining physician in confidence except:

(*a*) with respect to the chief occupational medical officer;

(*b*) where otherwise required by law; or

(*c*) with the informed consent of the worker.

Saskatchewan
Labour

Occupational Health
and Safety Branch

1150 Rose Street
Regina, Canada
S4P 3V7

The Repair and Removal of Pipe Insulation Containing Asbestos

The repair of pipe insulation unlike the removal of spray-on ceiling insulation can in most cases be readily done without creating excessive dust and debris. The areas of concern, if small, can be thoroughly wetted, carefully removed and placed immediately in plastic bags. The minimum personal protection necessary is coveralls and headgear. Protective footwear should be worn or means provided to replace or clean the footwear before leaving the repair area. A filter type respirator approved for protection against asbestos should also be worn as a precaution against accidental exposure to fibres from inadequate wetting of surfaces, dried deposits on coveralls, etc.

Plastic sheets should be placed below the point of repair to collect any fallen debris and the debris should immediately be placed in a sealed container before it dries and becomes liable to release fibres. At the end of the repair, this plastic sheet should also be placed in the container together with any contaminated coveralls and protective head and footwear.

Where thorough wetting of the insulation cannot be assured, or where large lengths of pipe insulation or boiler coverings are removed, such that fibres are likely to be released into the air, an enclosure should be constructed which is suitably ventilated to prevent the escape of fibres to other work areas. A screened area should be constructed adjoining the enclosure where contaminated clothing can be removed and stored. As the work enclosure is a confined space, at least a full face piece filter type respirator should be used as protection against inhaling fibres. The use of powered air purifying or air supply respirators may be necessary in unusual circumstances where insulation cannot be wetted or the rate of activity produces dusty conditions.

May 1984.

Saskatchewan
Labour

Occupational Health
and Safety Branch

1150 Rose Street
Regina, Canada
S4P 3V7

Sanding Asbestos Floor Coverings

To: Flooring contractors, Occupational Health Committee members, workers.

Many resilient flooring materials contain asbestos. The fibres are firmly bound into the material and do not present a hazard to the consumer under conditions of normal use. The flooring can be cut with little if any release of asbestos fibres.

However, if old asbestos-containing floor coverings are sanded (as is often the case in preparation for new flooring), then exposure to fibres presents a potential risk to the health of workers and subsequent occupants of the building.

To prevent dispersion of dust, the area being sanded should be enclosed - for example, by the use of polyethylene sheeting. Also, any ventilating system in the area should be isolated and covered.

Care should be taken not to track asbestos dust or debris from this enclosure to other parts of the building.

To protect the workers doing this task, coveralls and head coverings are to be provided and these garments vacuumed clean after each use. A clean respirator certified by NIOSH as being suitable for protection against asbestos dust is to be worn in the enclosed area.

On completion of the task, all debris should be bagged or wrapped in polyethylene or similar impervious material and clearly labelled "asbestos" before disposal. Land-fill disposal is appropriate, but the local public health authority should be contacted to ensure satisfactory procedures.

Since the precautions required for sanding asbestos floor coverings are quite stringent, it may be advisable to select an alternate method of preparing the surface for the laying of new flooring.

SASKATCHEWAN LABOUR
REMOVAL OF ASBESTOS ON CEILINGS AND WALLS

Saskatchewan Labour

Occupational Health and Safety Branch

1150 Rose Street
Regina, Canada
S4P 3V7

Removal of Wall and Ceiling Insulation Containing Asbestos

The attached Asbestos Regulations, Part XI of the Occupational Health and General Regulations, are the minimum requirements of this branch when removing asbestos insulation from walls and ceilings. They apply whenever asbestos fibres may be released into the air where workers work no matter in what concentration or what type of asbestos fibres are present.

Under these regulations it is the duty of the employer whose workers are removing the insulation to ensure as far as practicable that these requirements are followed. There is also a duty on the employer who is in control of the place where insulation is being removed to ensure that the contractor is aware of these requirements before work commences. (Occupational Health and General Regulations, section 14).

There are two basic requirements in Part XI:

1) exposed workers are to be provided with personal protective equipment which prevents the intake of asbestos into the body; and
2) the escape of asbestos dust to any other part of a place of employment is prevented.

To comply with (1) refer to section 112 of the attached regulations. An approved respirator for workers directly engaged in removing wall and ceiling insulation is an air-supplied type. Powered air purifying respirators may be permitted where, in the opinion of an Occupational Health Officer, the use of air-supplied respirators may cause a risk of physical injury.

Other filter-type respirators which are available for protection against asbestos fibres are permitted only for the casual presence of workers in the stripping areas and for preparatory work prior to insulation removal and for clean up.

To comply with (2) above refer to sections 112 and 114. Section 114 (2)(a) typically involves enclosing the walls, floor and fixtures with 6 mil polyethylene sheeting, ensuring ventilation systems are off and sealed and providing an area where workers may decontaminate clothing, equipment, etc. before leaving the work area. A suitable arrangement for this is shown in the accompanying diagram. Sufficient air must be exhausted from the work area to compensate for air supplied for sprays, respirators, etc. and to provide an inward flow of air of at least 100 feet/minute through any opening to the work area. Failure to prevent dispersion will result in contamination of other structures and equipment and may result in extensive clean-up costs.

It is necessary to arrange disposal of waste asbestos insulation, usually land fill burial, through the local health authorities. The remaining requirements for removal of insulation containing asbestos are clearly stated in the attached regulations.

NOTE: Many contract agreements are more detailed regarding specific procedures to follow as the public as well as workers must be protected from asbestos hazards. These agreements would take precedence providing regulatory requirements are met.

Decontamination Facility

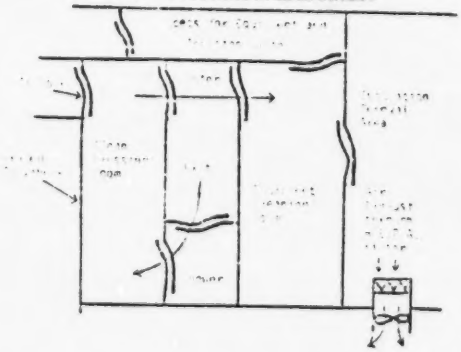

Saskatchewan
Labour

Occupational Health
and Safety Branch

1150 Rose Street
Regina, Canada
S4P 3V7

An Asbestos Control Program For Saskatchewan Workplaces

INTRODUCTION

Employers in Saskatchewan are required by Section 3(a) of The Occupational Health and Safety Act, 1980, to "ensure as far as is reasonably practicable the health, safety and welfare at work of all his workers". Overwhelming evidence shows that exposure to asbestos increases the risk of respiratory illness. The risk is present, albeit small, even when exposure is low or intermittent. Indeed the presence of asbestos in the everyday environment has been shown to present a small risk to the general public.

Regulations place a duty on the employer to ensure that where asbestos dust may be released into the air and be inhaled by a worker, suitable controls must be installed and as far as reasonably practicable, enforced, so as to prevent intake of asbestos into the body.

Regulations further identify certain actions to be taken by an employer which the Branch considers essential to comply with the intent of Section 3(a) of the Act. These, however, are not specific; the purpose is to identify the objective and to leave some flexibility to the employer on how the objective can most satisfactorily be met. To assist employers in meeting their duties a program is presented.

RECOMMENDED PROGRAM

Asbestos is present in many materials found in workplaces (e.g. in insulation, brake and clutch linings, cement board, gaskets, etc.). It is also present in unexpected situations such as carpet backing, floor tiles, bonding and filling compounds. Asbestos fibres in many of these materials are firmly bound and present no risk except when dust is formed from any cutting, sanding or similar operation.

Action 1

Identify materials containing asbestos which are likely (i.e. can reasonably be expected) to release asbestos dust. Identification can be made from Material Safety Data Sheets available from suppliers or simply by asking the suppliers to state formally whether or not the material contains asbestos. Alternatively samples can be submitted to commerical laboratories for examination. Sections 108 and 117 of the Health and General Regulations (Part XI, Asbestos) require all substances containing asbestos to be labelled 'ASBESTOS' if it is likely to release dust.

Action 2

As soon as a material is known to contain asbestos, suitable procedures for handling it must be established which, either by ventilation (Section 111) or by personal protective equipment (Section 112) and by work practices (Sections 113 and 114), will prevent exposure of the worker to dust containing asbestos and prevent the dispersal of the dust into the workplace.

Action 3

Once procedures are satisfactorily established all workers likely to handle the materials should be instructed on the required work practices and in the proper use and care of equipment including personal protective equipment. Supervisors are required to ensure as far as is reasonably practicable that workers comply with the procedures. Workers must be aware that disregard of procedures is serious not only to their own health but also to fellow workers and possibly their family. Section 4 of The Occupational Health and Safety Act imposes a duty on workers to co-operate with persons exercising duties placed on them by the Act (e.g. Supervisors).

Action 4

Material which contains asbestos in a consolidated form which does not usually produce dust, such as asbestos cement wall cladding or pipe, should be regularly inspected to determine whether damage has occurred which may permit asbestos to be released into the working environment. Any damage must be repaired as soon as possible.

CONTROLS

1. Dust extractors which capture dust at the point of formation (local ventilation) must be installed where practicable on all equipment which causes asbestos dust to be released. Ideally these extractors should enclose the point of release. Alternatively, the exhaust hood needs to be placed as close as possible to the point of release and move sufficient air to induce, at this point, an inward flow of air with a velocity of approximately 150 ft/min. The exhausted air must be filtered and discharged outdoors.

2. Where dust extractors are not practicable, the material must be thoroughly wet to minimize production of dust or to assist the effectiveness of the extractors.

3. Where the surface of any material containing asbestos is in a condition which may lead to the release of dust, the material can be coated with a suitable sealant. These vary from paints and lacquers to commerical encapsulants manufactured specifically for friable (crumbly) asbestos surfaces.

4. Where asbestos surfaces are subject to physical damage they should be enclosed with suitable protective material.

5. Any area in which maintenance work may result in the release of asbestos dust must be enclosed where practicable to prevent contamination of other parts of the workplace. All floors, walls, equipment, etc., which are in the enclosure must be thoroughly cleaned on completion of maintenance. Considerable time may be saved by using polyethylene sheeting to cover surfaces and by tightly wrapping it around equipment. A light spray of an encapsulating material will fix fibres to the polyethylene so that no dust is created when the sheets are removed. The enclosure should be ventilated sufficient to ensure an inward flow of air with a velocity of at least 100 ft/min. through any openings necessary for access. It may be necessary to construct a clean air section within the enclosure where workers change into clean clothing.

6. Vacuum cleaners used for clean-up of asbestos dust and debris should be fitted with a high efficiency filter to prevent dispersal of dust in the exhausted air.

7. Any loose asbestos debris or dust must be cleaned away promptly and securely stored in closed containers marked ASBESTOS. The outside of the containers should be clean. The containers must be strong enough, (at least 6 mil polyethylene), to minimize damage when handled.

   Waste can be disposed of by landfill at a site approved by the local municipal authority. Before producing waste, arrangements should be made for disposal. Disposal other than at an approved landfill must be acceptable to the Department of the Environment.

PERSONAL PROTECTIVE EQUIPMENT (Section 112)

a) Coveralls

These are required so as to prevent the dispersal of asbestos dust.

The requirements are that the coverall material is impervious to asbestos dust and that the coveralls are disposed of or cleaned in a safe manner each time they are used. The head should be protected as much as possible by a tightly fitting cover. To ensure asbestos dust is not carried on footwear, either overshoes or a means to clean footwear is necessary.

We recommend a one piece coverall and hood with zipper fastener and ankle and cuff seal, made of Tyvek material. Overshoes should be appropriate for the conditions, taking into consideration the safety of the worker (e.g. it may be necessary to climb a scaffold) and the durability of the overshoes (e.g. contact with water). This clothing is considered disposable and should be removed at the site of the work and stored in plastic bags for disposal. If contamination is light the coveralls may be reused in the same location but should not be taken to another work area.

If non-disposable coveralls are used they should be wetted and stored in a plastic container. The laundry where they are to be cleaned should be advised that the coveralls are contaminated with asbestos. Home laundering is discouraged as fibres may enter the dwelling exposing young children to risk.

All containers of the dirty coveralls must be labelled 'ASBESTOS' (Section 113(b).)

b) Respirators

The choice of respirators is dependent on the expected degree of dustiness and the length of time and frequency of exposure. They range from face masks to which a constant supply of clean air is supplied, to simple lightweight filter type masks.

Category 1

Supplied air, positive pressure full facepiece respirators (airline) provide the greatest degree of worker protection. The positive-pressure operation of the respirator greatly reduces the possibility of leakage of contaminated air into the respirator facepiece. For this respirator breathing quality air is supplied from compressed air tanks or from an air compressor drawing air from an uncontaminated source. Where breathing air is supplied from a piston compressor, smoke, oil and water filters must be placed in line and the compressor should be in good condition so as to prevent carbon monoxide gas being formed from burning oil. An oiless compressor is recommended.

Compressors must supply air of at least 115 l (4 cfm) per respirator for tight fitting facepieces and 170 l/min (6 cfm) per respirator for loose fitting hoods.

Category 2

Powered, air purifying (high efficiency filter) positive-pressure dust respirators supply air to the facepiece, so reducing the chance of inward leakage at the facepiece. Contaminated air must be effectively filtered in order to provide the worker with a supply of clean air. Only high efficiency filters may be used with these respirators in asbestos related work. There have been problems with filter packs which are attached simply by friction fit due to loosening and/or falling off. For units where such a problem could arise, filter packs must be firmly attached to the power pack/blower assembly. Duct tape wrapped around the filter packs and power units has proved effective in preventing the filter packs from loosening.

(Note: Where category 1 and 2 respirator systems use hoods or helmets, a close fit must be assured around the neck or shoulders to prevent inward air leakage due to head movements).

Category 3

Non-powered air purifying dust respirators filter asbestos dust from air entering the facepiece but the air supply is induced by breathing. If the facepiece does not fit tightly to the face, leakage will permit contaminated air to bypass the filter. Attention to proper fit is essential when using these respirators.

Category 4

Disposable lightweight face masks are air purifying respirators which although more comfortable do not provide assurance of a tight facial fit.

All the above categories are approved by the Occupational Health and Safety Branch for specific circumstances providing they bear the stamp of approval of the U.S. National Institute of Occupational Safety and Health (NIOSH) and/or the Mines Safety and Health Administration (MSHA) for protection against asbestos dust.

The circumstances of approval are as follows:

Category 1:

To be used where asbestos dust cannot be adequately controlled by local ventilation or wetting and where workers will be exposed to considerable dust for extended periods. Removing wall and ceiling sprayed insulation and handling dry pipe insulation are typical examples of operations in this category.

Category 2:

To be used

a) where category 1 equipment is not reasonably practicable due to space restrictions, or where its use presents a risk of physical injury to workers;

b) where category 3 equipment is required daily as part of a regular work process.

Category 3:

To be used where asbestos dust cannot adequately be controlled but exposure is intermittant and infrequent. Typical examples would be the cleaning of asbestos debris from floors and furnishings, maintenance which involves incidental disturbance of asbestos and the occasional cutting, grinding or drilling of asbestos containing materials.

Category 4:

To be used for potential exposures where the worker is not directly engaged on tasks causing disturbance of asbestos, for example, during the inspection of asbestos surfaces.

The choice of a suitable respirator is important. It is equally important to ensure that they are maintained and cleaned. Each day after use they are to be thoroughly cleaned, examined for defects and stored in an asbestos free work area, preferably inside sealed containers.

WORKER EDUCATION

All workers employed handling materials which contain asbestos in a manner likely to produce dust must be advised of the dangers of inhaling asbestos dust and that the risk of ill health due to asbestos is increased by smoking (Section 115).

Workers must formally be instructed on the required procedures for any work during which asbestos materials are handled or during which asbestos dust may be released (e.g. installing cables along asbestos surfaces). It is important that operations involving asbestos are effectively supervised and that areas where exposures may occur are defined. A permit system should be set up whereby contractors and other off-site personnel are appraised of the danger before work commences.

Where practicable a written procedure to which ready reference can be made by the worker is recommended. Procedures should include the proper use and care of personal protective equipment (Section 113). However instruction is to be more than simply requiring a worker to read documents, procedures, etc. To satisfy requirements under Section 3(a) of the Act (i.e. to ensure the health of workers) the performance of workers in executing the procedure should be observed and corrected where necessary.

AIR MONITORING

In Saskatchewan an asbestos control program can be administered without the need of air monitoring. Asbestos regulations require the application of controls, which include personal protective equipment, whenever asbestos dust is likely to be released into the atmosphere where workers work. The majority of these situations can readily be identified by visual examination. Materials in which the asbestos fibres are firmly bonded are unlikely to produce dust unless the bond is broken either intentionally (e.g. drilling, sawing) or unintentionally (e.g. physical or water damage). A major source of dust is where debris collects on floors, beams, equipment, etc., and is disturbed by activity or vibration within the workplace.

The effectiveness of controls can be evaluated by smoke tracers. It may sometimes however by desirable to sample air adjacent to these controls to confirm the visual observations. Such tests should be designed to identify weaknesses in the controls (e.g. egress and entry of workers into work enclosures) and so should be made over short periods when such incidents are expected. If the test technique shows any increase in airborne fibres above background then the cause of control failure should be examined. The principle of evaluating worker exposure over an 8 hour work day has little relevance to Saskatchewan regulations.

PUBLICATIONS

1. Selection Care and Use of Respirators
   Canadian Standards Association
   178 Rexdale Boulevard
   Rexdale, Ontario
   M9W 1R3

2. Asbestos Control--Sprayed on Applications
   Government of Alberta
   Workers Health, Safety and Compensation Department
   (Occupational Health and Safety Division)

3. Removal of Preformed Asbestos Insulation
   United States Navy
   Naval Sec Systems Command

4. Asbestos Related Disease
   Government of Alberta
   Department of Labour

5. Asbestos in the Workplace Series (9 volumes)
   Council of Safety Associations
   2 Bloor Street East
   Toronto, Ontario
   M4W 3C3

APPENDICES

ASBESTOS SUBSTITUTES

Material Code	Asbestos Product Description	Suggested Replacement Products	Suggested Vendors
	Gasket sheet asbestos 1/32" x 36" asbestos paper 50 lb roll	Kaowool paper 20 mil thickness	Anchor Packing Co. Ltd.
	1/8" x 42" white woven asbestos Albion Asbestos 445 closely woven brass wire inserted asbestos cloth - temperature limit 600°F	Zetex 1350 cloth coated on both sides with silicone rubber and with stainless steel wire insert	Kulka Distributors
	1/16" x 42" Albion Asbestos 1 compressed asbestos cloth - temperature limit 500°F	1. Zetex 1100 cloth 2. Thermofab cloth style #221	Kulka Distributors Albion Asbestos Packings Ltd.
	3/16" x 42" white woven asbestos Albion Asbestos 445 - closely woven wire inserted asbestos cloth - temperature limit 600°F	Zetex 2200 cloth with stainless steel wire insert and coated both sides with silicone rubber	Kulka Distributors
	Packing Johns Manville 580 3/4" temperature limit 750°F solid plaited rope square cross-section	Albion 181 impregnated Kevlar yarn 3/4" square cross-section	Albion Asbestos Packings

Material Code	Asbestos Product Description	Suggested Replacement Products	Suggested Vendors
	Packing Johns Manville 580 1" temperature limit 750°F solid plaited rope square cross-section	Albion 181 impregnated Kevlar yarn 1" square cross-section	Albion Asbestos Packings Ltd.
	Packing Albion Asbestos 74, twisted asbestos rope packing, 1" diameter, temperature limit 1,000°F	1. Thermofab rope style #227 round 1" diameter 2. Zetex braided packing 400PG-1000 1" diameter twisted rope	Albion Asbestos Packings Ltd. Kulka Distributors
	Tape woven asbestos 1/8" x 3" x 100' Johns Manville 122, temperature limit 500°F	1. Zetex 2500 tape, 1/8" x 3" x 100' 2. Thermofab tape, style #301, 1/8" x 3" x 100'	Kulka Distributors Albion Asbestos Packings Ltd.
	Tape, woven asbestos 1/16" x 2" x 100' Albion Asbestos #121 temperature limit 500°F	1. Zetex 1000 tape, 0.065" x 2" x 100' 2. Thermofab tape, style #151, 1/16" x 2" x 100'	Kulka Distributors Albion Asbestos Packings Ltd.
	Tape, woven asbestos 1/8" x 2" x 100' Albion Asbestos 121, temperature limit 500°F	1. Zetex 2500 tape 1/8" x 2" x 100' 2. Thermofab tape, style #301, 1/8" x 2" x 100'	Kulka Distributors Albion Asbestos Packings Ltd.
	Tape, woven asbestos 3/16" x 2" x 50' Albion Asbestos 468 temperature limit 500°F	1. Zetex 2500 tape 1/8" x 2" x 100' coated with silicone rubber on both sides 2. Thermofab tape, style #301, 1/8" x 2" x 100' coated with silicone rubber on both sides	Kulka Distributors Albion Asbestos Packings Ltd.

Material Code	Asbestos Product Description	Suggested Replacement Products	Suggested Vendors
	Tape woven brass wire inserted asbestos 1/16" x 1/2", Albion Asbestos 100, temperature limit 500°F	Zetex 1000 tape 0.065" x 1" x 100' with stainless steel wire insert	Kulka Distributors
	Tape, woven asbestos drop warp, or buttonhole, 1/16" x 2" x 150', Albion Asbestos 123, temperature limit 500°F	No replacement product available at this time. Kulka Distributors and Albion Asbestos Packings Ltd. should be approached concerning the possibility of manufacturing a replacement product.	
	Asbestos gloves	1. Zetex mittens, product code #22112-1100	Kulka Distributors
		2. Thermofab mittens 14" long	Albion Asbestos Packings Ltd.
	Heliarc hose - asbestos covered	1. Thermofab tubing, style #386, inside diameter 1 1/2" x 12' long	Albion Asbestos Packings Ltd.
		2. Zetex tubing, 1 1/2" ID x 12' long	Kulka Distributors

Note: This list is by no means complete, but is indicative of available substitutes.

SEALANT MATERIALS

MATERIAL	COMPANY	KNOWN CANADIAN SUPPLIERS
Decadex Firecheck	Pentagon Plastics 659C Fullerton Road Springfield, VA U.S.A. 22153 Tel: (703) 569-5277	MacKenzie & Feimann Ltd. Regina or Saskatoon
Chemex Ultra	Chemix Chemical & Coating Co. P.O. Box 5072 Tampa, FL. U.S.A. 33675 Tel: (813) 248-6104	
Water-based Polyester	Western Coating Co. P.O. Box 598 Oak Ridge Station Royal Oak, Michigan U.S.A. 48073 Tel: (313) 588-3311	
Water-based XD-DG	Western Coating Co. P.O. Box 598 Oak Ridge Station Royal Oak, Michigan U.S.A. 48073 Tel: (313) 588-3311	
Cafco-Bond-Seal	Cem-Al Products Ltd. 20 Laidlaw Blvd. Markham, Ontario L3P 1W7	Alpine Drywall Ltd. Regina or Saskatoon or J.K. Campbell Assoc. Ltd. Regina or Saskatoon or Romoda Ltd. Edmonton or Calgary, Alberta
554-21-1	Mulco Inc. 2835 Grande Allee St. Hubert, Quebec J4T 3K3 Tel: (514) 465-5470	Aqua Construction Calgary, Alberta or Donalco (Alberta) Ltd. Edmonton or Calgary Alberta or Keycon Construction Specialities Ltd. Edmonton, Alberta

MATERIAL	COMPANY	KNOWN CANADIAN SUPPLIERS
#207 Special Sealer and Pleco-Glo	Makus Development Corp. P.O. Box 31 Mercer Island, WA U.S.A. 98040 Tel: (206) 641-7373	
Pyrokote - MX	Development Services International 2021 K Street N.W. Suite 305 Washington, D.C. U.S.A. 20006 Tel: (202) 331-7371	
29-C Aqualoid 15-10	Essex Chemical Corp. 125 Blackstone Ave. Jamestown, N.Y. U.S.A. 14701 Tel: (716) 665-6313	
Asbestop BW225 Two Component	McGeddy International Inc. 1043 Broadway W. Longbranch, N.J. U.S.A. 07764 Tel: (201) 229-5580	
Ultra Lok 40-871	Cellin Manufacturing Inc. P.O. Box 688 Springfield, VA U.S.A. 222150 Tel: (703) 550-7277	
Penqua 200	United Coatings E. 1130 Sprague Ave. Spokane, WA U.S.A. 99202 Tel: (509) 535-4131	
350-A-1 Asbestight 2000	Arpin Engineering Inc. 1716 Melvill Street Oakhurst, N.J. U.S.A. 97755 Tel: (201) 224-5580	
Product # H-6625-583-9	Habersham Industries Ltd. 5212 Industrial Court Smyrna, GA U.S.A. 30080 Tel: (404) 351-7173	

MATERIAL	COMPANY	KNOWN CANADIAN SUPPLIERS
Cable Coating 2-B	American Coatings Corp. 5235 N. Elston Chicago, ILL. U.S.A. 60630 Tel: (312) 286-6610	
Dust-set	Mateson Chemical Corp. 1025 Montgomery Ave. Philadelphia, PA U.S.A. 19125 Tel: (215)423-3200	
662-583	Findley Adhesives Inc. P.O. Box 3000 Elm Grove, WI U.S.A. 53122 Tel: (414) 782-2250	
Mono-Therm F-100	Mono-Therm Industries, Inc. 10819-120 Avenue N.E. Kirklan, WA U.S.A. 98033 Tel: (800)426-8080	
Sk-13 Emulsion 360-0017	National Cellulose Corp. 12315 Robin Boulevard Houston, Texas U.S.A. 77045 Tel: (713) 433-6701	National Cellulose B.C. Ltd. Surrey, B.C. V3W 5V8 Tel: (604) 591-5577 Engineered Urethane Ltd. Edmonton, Alberta Airway Texturing and Insulation Ltd. Edmonton Calgary Insulation Services Calgary, Alberta
EX-64-2	Lehman Bros. Corp. 22 Halladay Street Jersey City, N.J. U.S.A. 07304 Tel. (201) 434-1882	Laurentian Resens Ltd. 1785 Woodward Dr. Ottawa, Ontario K2C OR4

NOTE: Sealants may alter the original purpose of the sprayed-on surface. in particular, fire retardant and acoustical characteristics.